Department of Commerce $ National Oceanic & Atmospheric Administration $ National Marine Fisheries Service

NATIONAL MARINE FISHERIES SERVICE INSTRUCTION 04-105-01 ***JANUARY 15, 2003***
Science and Technology ***Standards and Protocols for Surveys***
NOAA FISHERIES PROTOCOLS FOR ICHTHYOPLANKTON SURVEYS
NOTICE: This publication is available at: http://www.nmfs.noaa.gov/directives/.
OPR: F/ST **Certified by:** F/ST (W. Fox) **Type of Issuance:** Rrenewal (01/06)
SUMMARY OF REVISIONS: Signed _____ [Approving Authority name] Date [Approving Authority title]

NOAA Fisheries Protocols for Ichthyoplankton Surveys

January 15, 2003

Prepared by:
Members of NOAA Fisheries Science Centers

U.S. Department of Commerce
National Oceanic and Atmospheric Administration
National Marine Fisheries Service

Table of Contents

Introduction 5

NOAA Fisheries Ichthyoplankton Survey Protocols
- Protocol 1: Determination of gear depth 7
- Protocol 2: Ichthyoplankton gear using telemetry 9
- Protocol 3: Ship mounted sampling systems 10
- Protocol 4: Survey operational procedures 10
- Protocol 5: Net and frame construction 11
- Protocol 6: Changes to Regional Ichthyoplankton Surveys 12

Regional Protocols 13
- Appendix 1 - Alaska Fisheries Science Center Operating Protocols 15
- Introduction 17
  - Protocol 1: Determination of gear depth 19
  - Protocol 2: Ichthyoplankton gear using telemetry 19
  - Protocol 3: Ship mounted sampling systems 20
  - Protocol 4: Survey operational procedures 20
  - Protocol 5: Net and frame construction 20

- Appendix 2 - Southwest Fisheries Science Center Operating Protocols 23
- Introduction 25
  - Protocol 1: Determination of gear depth 27
  - Protocol 2: Ichthyoplankton gear using telemetry 28
  - Protocol 3: Ship mounted sampling systems 29
  - Protocol 4: Survey operational procedures 29
  - Protocol 5: Net and frame construction 36
- Literature Cited 46

- Appendix 3 - Northeast Fisheries Science Center Operating Protocols 47
- Introduction 49
  - Protocol 1: Determination of gear depth 51
  - Protocol 2: Ichthyoplankton gear using telemetry 51
  - Protocol 3: Ship mounted sampling systems 51
  - Protocol 4: Survey operational procedures 51
  - Protocol 5: Net and frame construction 52

- Appendix 4 - Southeast Fisheries Science Center Operating Protocols 55
- Introduction 57
  - Protocol 1: Determination of gear depth 59
  - Protocol 2: Ichthyoplankton gear using telemetry 59
  - Protocol 3: Ship mounted sampling systems 59
  - Protocol 4: Survey operational procedures 59
  - Protocol 5: Net and frame construction 62
- Literature Cited 64

Appendix 5 - Northwest Fisheries Science Center Operating Protocols 55
Introduction 57
Protocol 1: Determination of gear depth 59
Protocol 2: Ichthyoplankton gear using telemetry 59
Protocol 3: Ship mounted sampling systems 59
Protocol 4: Survey operational procedures 59
Protocol 5: Net and frame construction 62

Introduction

In response to the creation of the "NOAA Protocols for Groundfish Bottom Trawl Surveys of the Nation's Fishery Resources," the Assistant Administrator for NOAA Fisheries, Dr. William Hogarth, assigned the task of implementing national protocols for all surveys conducted by NMFS, which ultimately determines some type of population index or stock assessment analysis. Since the body of NMFS's work includes a multitude of surveys, the scope of the standardization was focused on those surveys, which create guidelines that may impact the fishing public and industry in various ways. Whereas the original "National Trawl Survey Standardization Workshop" created only protocols specific to trawl surveys, specifically bottom trawls and midwater trawls without the use of a rigid frame, the protocols outlined in this document will encompass sampling protocols employed by NMFS researchers unique to ichthyoplankton surveys.

Ichthyoplankton surveys attempt to define specific characteristics of marine populations from early life history strategies to standing biomass estimates. Since the bulk of the fishing industry does not focus directly on the ichthyoplankton component, these surveys can give us a true fishery-independent estimate. Since the introduction of the Egg Production Method or Daily Egg Production (EPM or DEPM) around 1985, we have an accurate estimate of many of the midwater and pelagic species standing biomass if we have accurate and consistent measurement of the ichthyoplankton along with fishery-independent adult parameters. Since the inherent nature of ichthyoplankton possesses variability on small and large scales, sampling protocols need to be established to eliminate as many self inflicted fluctuations as possible. The protocols proposed in the following document attempts to address these issues.

NOAA Fisheries conducts ichthyoplankton surveys with a wide variety of characteristics. Not only do the target species, and therefore the appropriate sampling methods differ among surveys, but the characteristics of the survey vessels differ which include chartered fishing vessels as well as NOAA research vessels. Because of this variety, NOAA Fisheries protocols for standardization of ichthyoplankton surveys are specified in general terms to establish the purpose of the protocol and delineate a strategy for its use. The implementation of the protocol surveys in each region is then provided in appendices. An over-arching theme through this document is that the intent of standardization is not to eliminate variability in methodology among Science Centers, but to ensure that the methodology that is used by each Science Center is consistent over time to reduce any introduced variability.

Operational Protocols for Ichthyoplankton Survey Protocols

Determination of Gear Depth

Problem Statement

For ichthyoplankton surveys using gear, which does not have telemetry, it is imperative to know the terminal depth to which the gear samples. This would appear to be most crucial in oblique tows but also plays a major role in other types such as vertical tows and static depth tows. Obviously neuston tows will not have this type of concern. Relatively light mechanical cable (3/16" - 5/16") used for ichthyoplankton tows is highly influenced by ocean currents and the speed of the ship during the tow. This influence is translated to the sampling frame and has the potential for the introduction of bias into estimates created from this data. Since most oblique ichthyoplankton tows collects an integrated sample from surface to depth, it is not so critical to know the specific path in which the nets and frame travels. But for the purpose of density calculations, terminal depth is used for many of the estimates. An additional concern regarding the measurement of the terminal depth occurs when those areas to be sampled is shallower than the desired depth. Turning a delicate plankton net into a dredge is never a pleasant discovery. The main factors which come into play for the estimation of sampling terminal depth are wire length and wire angle.

Presently, the majority of ichthyoplankton surveys conducted aboard NOAA vessels dynamically measures the amount of wire out with the use of electronic systems incorporated into the winches or sheaves. Additional methods include the attachment of a mechanical counter to the wire or stretching the wire out against a meter tape and marking the wire with paint or pieces of line woven into the cable at specified increments. Each individual type of measurement possesses it's own inaccuracies. In the case of the dynamic system, if an incorrect calibration coefficient is entered, all of the wire metered out will be incorrect and the effect is magnified as more wire is payed out. Therefore, the following protocols have been established to eliminate or reduce these types of errors by proposing the use of redundant measurements to wire measuring devices as well as pressure measuring devices.

Protocol 1: Wire Measurement

For ichthyoplankton surveys in which a non-telemetric system is used, two independently calibrated measuring methods shall be used to establish an accurate measurement of the amount of wire spooled out in real-time. This calibration will be done at the start of each survey.

The specifications for the measurement of all tow wires to be used during the survey will be indicated in an Operations Plan provided to the vessel and crew prior to the survey by the Science Center. In the case of using charter vessels for any type of ichthyoplankton survey, the program will clearly specify the type of wire and size and to the method of insuring consistent metering of tow wire dimensions during the bidding process .

Sub-Protocol 1a: Physical wire markings

Physical marking of mechanical wire generally involves spooling the wires off the drums and onto a flat surface to measure the wire relative to standard lengths. The spacing of such marks, details of marking method (fiber marks interwoven in wire rope strands or painting of marks),

and degree of tension on the wire will be specific to the application. These marks will be checked and re-calibrated at least annually or sooner if the marks become illegible.

In circumstances where marking or remarking mechanical wire in the above method may be difficult or impossible, the wire may be measured and marked at sea using the following procedure. Calibrated in-line wire meters can be used to measure and mark length intervals when deployed under tension (a recommended weight of 100 pounds hanging overboard should be adequate). Position of all marks should be confirmed by repeating the measurements.

Sub-Protocol 1b: In-line wire meters
In-line wire meters measure wire lengths directly using running line tensiometers or instrumented blocks over which the wire travels as it is payed out or retrieved. Such systems deflect the running wire by a known amount to facilitate measuring under tension and may be subject to deviations from true measurements due to wire slippage. These devices should be calibrated using known lengths of wire at least annually, using manufacturer recommended procedures, with moving parts (bushings, sheaves, etc.) inspected and replaced, as required. Since some in-line wire meters are relatively small and portable, they may be provided to the vessels by the Science centers provided they are appropriately calibrated.

Sub-Protocol 1c: Electronic wire counters
Electronic wire counters measure the length of wire passing over a level-wind sheave or oceanographic block sheave of known circumference, which is equipped with a proximity counter to enumerate the number of revolution of the sheave. Length of the wire is thus calculated by multiplying the number of block revolutions by the circumference of the sheave. These devices may be subject to deviations from true measurements due to wire slippage. Electronic wire counters should be calibrated at least annually or after any major work is performed on the winch, level wind or block with a known length of wire or a recently calibrated in-line wire meter.

Supplemental depth measurements:
An additional procedure that will be set as a guideline is to verify that the gear is responding as it should once the wires have been properly measured . There is also a need to calibrate or confirm the measurements shown by the hand held or on-wire inclinometers. Basically, an inclinometer can be shown to be in calibration by comparing the 0% and 90% marks to a bubble level. Once those marks have been established, angle bisects can be measured and marked off down to the smallest desired increments. It is recommended that further verification of gear depth be done by attaching TDRs (Time-Depth Recorders) or other pressure measuring devices that will not affect the fishing performance of the frame.

Discussion
The proposed protocol requires that the two independent wire measurements be reconciled when any differences are observed. The reconciliation of the differences shall be the responsibility of Chief Scientist or FPC (Field Party Chief). In addition, verification of gear depth using TDRs will be the final confirmation of correct wire measurement.

Ichthyoplankton Gear Using Telemetry

Problem Statement

At a minimum, ichthyoplankton sampling systems, which possess the ability to view the real-time depth of the gear, eliminates the need for accurate wire measurements in order to determine where the gear is fishing. Unfortunately it may also present a false sense of security if the depth sensors are not properly calibrated on a routine basis either by field calibrations or in the laboratory. Sensors located on ichthyoplankton equipment cover a fairly wide range of measurement parameters. From sensors which measure the physical attributes of the system such as depth sensors, flowmeters and pendulum type inclinometers to highly sensitive environmental sensors such as temperature, conductivity, dissolved oxygen and fluorometric sensors to list only a few. While calibration of the environmental sensors must be done by a qualified lab, many of the sensors measuring the physical attributes of the system can be confirmed in the field. Continuity of data collected between surveys must be maintained to the highest possible standards and this can only be achieved with consistent guidelines of calibration for all sensors.

Protocol 2: Calibration of Ichthyoplankton Gear Using Telemetry

Sub-Protocol 2a: Pressure sensors

In the majority of cases, pressure sensors should be returned to either the factory or a qualified calibration laboratory at least once a year if the surveys are done on a yearly basis. If surveys are done on less than a yearly basis, calibration must be accomplished prior to the field season. Field calibrations may be necessary in some cases and may be performed by the use of redundant measurements. With the system connected to the conductive wire, it should be lowered to a depth at which it will be sampling while the ship is completely at a stop. The wire must be maintained as close to 0% as possible while the system is lowered and retrieved. Several stops at specified depths will be held for several minutes for depth verification. During the descent and ascent, a calibrated in-line wire meter will also be used in conjunction with the electronic wire counter. Stopping points will be recorded and compared with the pressure sensor read-out. If the sensor can be adjusted to match the redundant readout (either mechanically or through the software), then all further depth recording will be used. If no adjustment can be made then the offset will be noted and applied to all readings.

In addition to, or instead of the wire readout comparison, calibrated TDRs will be attached to the sampling frame during standard tows. This will not be as accurate as the wire readout comparison but it will indicate large discrepancies if present, specifically at the terminal depth readings.

Sub-Protocol 2b: Flowmeter calibrations

Flowmeters perform an essential and critical function in ichthyoplankton sampling systems. Their function pertains to both non-telemetric and telemetric systems by measuring the distance traveled through the water during a tow. Since distance traveled relates directly to the amount of water filtered, hence a final estimate of ichthyoplankton density, distance measure must be accurate and consistent. Calibration at sea is difficult at best and not recommended. The method

of calibration is the responsibility of each Science Center and should be performed just prior to each survey. In addition, the method of calibration must be consistent from survey to survey.

Sub-Protocol 2c: Adjustment of electronic inclinometers
In those systems, which rely on the measurement of the frame aspect such as MOCNESS (Multiple Opening/Closing Nets and Electronic Sensing System) and BIONESS (Bedford Institute of Oceanography Net and Environmental Sampling System), the angular orientation of the frame is a critical component of the calculation of the amount of water filtered. Prior to each survey, the frame angle will be compared to a calibrated hand held inclinometer and adjusted accordingly. A minimum of two different angles should be compared.

Sub-Protocol 2d: Environmental sensor calibrations
All sensors being used during ichthyoplankton surveys will be returned for calibration a minimum of once a year.

Ship Mounted Sampling Systems

Problem Statement
With the proliferation of underway ichthyoplankton survey systems such as CUFES (Continuous Underway Fish Egg Sampler), there is a need to establish a standardized protocol for measuring certain parameters, which is unique to these systems. The primary measurable parameter crucial to estimating abundance is the rate at which these systems sample the environment and the technique in which to measure it. Since the flow does have a tendency to vary with the amount of fouling in the concentrator screen, it would be best to measure the flow on a real-time basis. Unfortunately, a standardized system has not yet been determined as to the best method for measuring flow. The precision and cost of devices is, of course, proportional and runs the gamut from small inexpensive piezoelectric type sensors to expensive digital correlation transit time flowmeters.

Protocol 3: Flow Rates
Unless other means for measuring the flow rate of a ship mounted system is already available, the minimum requirement for determining flow rate of the system will be to volumetrically measure the output of the submersed pump against a known time interval. This can be as simple as directing the output into a large container and using a stopwatch to measure the time interval. Once the volume has been collected it can be measured with pre-measured containers. This measurement will be done prior to the start of the survey and at the completion of the survey. The average of the two readings will be used as the flow rate for the entire survey.

Survey Operational Procedures

Problem Statement
Standardization of station selection, gear deployment, operation, and retrieval procedures are critical for maintaining consistency in survey sampling over time. Factors that can affect gear performance and sampling ability of marine organisms include selection of tow location; ship

speed during descent, towing and ascent of gear; wire speed during descent, towing and ascent of gear; optimal wire angle during tow; tow direction; and maximal working sea state. Written unambiguous protocols specifying these and other issues that may affect survey consistency provide a mechanism for communication between scientific staff and the officers and crew of the research vessel, which maintains continuity in procedures as personnel, and vessels change over time.

Protocol 4: Operations Plan

Each Science Center will provide a written Operations Plan to their staff and the crew of the survey vessels that provides clear and unambiguous definitions of all procedures required to properly conduct ichthyoplankton sampling. The Operations Plan will be discussed by the Chief Scientist and vessel crew at the start of each survey and again when crew changes occur. The Operations Plan may include, but is not limited to, the following issues:

a. Optimal wire angle
b. Speed of tow
c. Duration or distance of tow
d. Direction of tow
e. Location of sampling sites
f. Criteria for determining the success of a tow and procedures to use if a tow was
g. unsuccessful
g. Vessel and winch operation during gear deployment and retrieval
h. Ichthyoplankton gear construction plans, at-sea repair instructions and repair verification checklist
h. Defining responsibility (i.e. survey scientists or vessel crew) for decisions regarding various aspects of the operations

Discussion

Although nearly all NOAA Fisheries ichthyoplankton surveys provide some form of an operations plan to their staff and the officers and crew of the survey vessels, some aspects of the operation that potentially influence survey sampling success may be omitted or specified in insufficient detail to eliminate individual interpretation. By increasing the level of detail and formalizing the communication of procedures, the intent is to make operations consistent among members and over time of scientific staff and vessel crew.

Net and Frame Construction

Problem Statement

Standardization of ichthyoplankton survey gear construction and repair is unquestionably the most critical element for survey standardization because, on NOAA Fisheries ichthyoplankton surveys, the gear are not simply devices to capture ichthyoplankton but are scientific instruments used to sample ichthyoplankton populations and, as such, must conform to high levels of tolerance in their construction and repair. Since the gear is used in a quantitative manner, it is essential that the ability of the gear to sample a population, or to sub-sample a population with the highest degree of repeatability be maintain. Although ichthyoplankton gear is generally

considered as a sampling unit, it is actually comprised of many components acting in unison. The integrity and consistency of each component making up the entire unit must be held to rigid standards.

Protocol 5: Construction Plans
Construction plans for each ichthyoplankton survey system design will be maintained by each Science Center and included in an Operations Plan. The plans must include engineering drawings of the net, frame, rigging and any sensors present with a level of detail at least as specific as that in the ICES (International Council for the Exploration of the Sea) recommended standard (ICES C.M. 1989/B:44 Report of the Study Group on Net Drawing). In addition, each plan must contain description of all materials used, and the qualities of these materials considered important for proper sampling function.

A check list will be developed for each system design specifying the dimensions, and their tolerances, or other design features considered important for proper sampling function. The check list will be used to verify that each newly constructed or repaired system is within operational tolerances before use.

Verification that systems are within operational tolerances will be conducted by members of the scientific staff of each Science Center who are familiar with the system's construction and method of repair.

Methodology for at-sea gear repairs will be specified in an Operations Plan and communicated by the Chief Scientist to the crew of the vessel at the start of each cruise. A gear repair check list will be included in the Operations Plan and used by a member of the scientific staff to verify that the repaired gear is within operational tolerances.

Discussion
The intent of this protocol is to ensure that, through more exacting specifications and verification, the gear used in a survey will perform identically regardless of the circumstances under which the gear was constructed and repaired.

Changes to Regional Ichthyoplankton Survey Protocols

Protocol 6: Changes to Survey Operational Protocols
Changes to survey operational protocols will be at the discretion of the appropriate Science Director who may approve such changes directly or specify a peer review process to further evaluate the justification and impacts of the proposed changes.

Regional Protocols

Because of the diversity among NOAA ichthyoplankton surveys, the ichthyoplankton survey standardization protocols were, in most cases, specified in general terms to allow each Science Center flexibility in it's approach to standardization. In this section, the specific methodology used by each NOAA survey is detailed in either a complete Field Operations Plan or additions to existing Plans to bring them in conformity with the requirements of the protocols.

Appendix 1: Alaska Fisheries Science Center
-AFSC is conducting a single quantitative larval survey to determine abundance of walleye pollock in late May.

Appendix 2: Southwest Fisheries Science Center
-CalCOFI Survey
-Cowcod Conservation Area Survey
-DEPM Sardine Biomass Survey

Appendix 3: Northeast Fisheries Science Center
-Ecosystem Monitoring Program

Appendix 4: Southeast Fisheries Science Center
-SEAMAP Survey

Appendix 5: Northwest Fisheries Science Center
-Ichthyoplankton Surveys

Appendix 1

December 30, 2003

Alaska Regional Standard Operating Protocols for: quantitative larval survey to determine abundance of walleye pollock in late May.

Prepared by Personnel from NOAA Fisheries
Alaska Fisheries Science Center

Introduction

Larval Abundance Index of Walleye Pollock

The AFSC conducts multiple larval fish surveys each year, but only one, the late larval survey is currently used for management purposes. The larval survey of walleye pollock is conducted within the last two weeks of May to determine the abundance index of this species. The general survey area is the northwestern Gulf of Alaska (Figure 1). The main grid for the larval abundance index runs from the Shumagin Islands up to the northwest side of Kodiak Island. Surveys are routinely conducted on the NOAA Ship Miller Freeman. Each sample is collected with a MARMAP-style, 60 cm bongo frame using 505 _m mesh nets. The gear is fished to 100 meters or 10 meters off bottom. Samples from net #1 are preserved in 5% Formalin at sea and later sorted for all larval fish species to determine the abundance and CPUE for each species. Larval pollock that are removed from net #2 are counted, recorded, and immediately preserved in 95% ethanol for otolith analysis (age, growth and hatch date distributions of the population). Detailed instructions for towing and sample handling may be found in the FOCI Field Manual (Brown et al. 1999)

Protocol 1: Determination of gear depth

The AFSC uses telemetered depth data as its primary system (SeaBird SeaCat, SBE-19), and a combination of wire out and wire angle as the backup.

Sub-Protocol 1a: Physical wire markings:
The wire on the starboard winch is marked with paint at 10 meter intervals for the first 100 meters. At the beginning of each survey, the wire with the full survey gear is lowered vertically while the ship maintains a zero wire angle. When the top of the SeaCat is at the surface, the wire meter is zeroed. The gear is then slowly lowered to each 10 meter interval of marked wire. The output from the SeaCat and the wire meter are then compared to the mark on the wire. This same procedure is repeated with the ship underway to compare discrepancies when the wire is at an angle with its full tension load.

Sub-Protocol 1b: In-line wire meters:
Not used during the walleye pollock survey.

Sub-Protocol 1c: Electronic wire counters:
The counter systems used on all the NOAA Ship Miller Freeman winches have two proximity sensors mounted next to a sheave of known diameter. A small piece of metal on the sheave rotates past the two proximity sensors. As the metal piece passes by a sensor, an electromagnetic field produced by the sensor is disturbed. This triggers the sensor to send out a data pulse to a processing and display (deck) unit. By using two sensors, the deck unit can determine if the winch is paying out or hauling in (depending on which of the two pulses the deck unit receives first).

The circumference of the measuring sheave that is on the Miller Freeman's starboard winch is 0.5 meters, so two sets of pulses will be interpreted by the deck unit as one meter of cable. This calibration factor is entered into the deck unit at the time of installation. To count one rotation of the measuring sheave, the deck unit must receive two pulses. Wire speed is determined by how fast the pulse is received by the deck unit.

The deck unit provides a local display and also serial (NMEA) data that can be logged (such as in the SCS system). The deck units currently used on the *Miller Freeman* are manufactured by Markey and by Measurement Technology Northwest (model LCI-90).

Sub-Protocol 1d: Supplemental depth measurements:
None used during the walleye pollock survey.

Protocol 2: Ichthyoplankton gear using telemetry

Sub-Protocol 2a: Pressure sensors:
A SeaBird SeaCat (SBE-19) is attached to the wire approximately 1 meter above the 60 cm bongo frame. Real time display of conductivity, temperature, and depth is monitored in DataPlot (ship's computer room).

Sub-Protocol 2b: Flowmeter calibrations:
General Oceanics flowmeters are mounted in both mouths of the bongo net frame. They are calibrated at the University of Washington Harris Hydraulics Laboratory flume, duplicating the normal operating speeds in which a flowmeter may be used in the field. All flowmeters are annually calibrated (see procedures used by Smith and Richards, 1977).

Sub-Protocol 2c: Adjustment of electronic inclinometers:
No electronic inclinometers used during the walleye pollock survey.

Sub-Protocol 2d: Environmental sensor calibrations:
The SeaCat is annually calibrated by the manufacturer. New calibration factors from the manufacturer are entered into the data acquisition computer before each field season. The procedures used to calibrate the amount of wire out also applies to field testing the SeaCat before each survey to confirm the new calibration files are correct.

Protocol 3: Ship mounted sampling systems

No ship mounted sampling systems used during walleye pollock survey.

Protocol 4: Survey operational procedures

The SeaCat is attached to the wire approximately one meter above the 60m cm bongo frame to provide real-time depth data. The frame is fitted with 505 _m mesh nets and 4" PVC codends (with 505 _m mesh drain holes). At the first station, a test of the SeaCat vs the metered markings on the wire is accomplished (see previous section Physical Wire Markings). The initial flowmeter readings for each side of the bongo are recorded on the Cruise Operations Database (COD) form along with the station identification information (Figure 2). The nets and codends are inspected for damage before and after each tow. The gear is launched via the starboard winch at 40 meters per minute. During periods of bad weather and heavy surge, the winch operator is instructed to let the wire out at a much slower rate (20 -30 m/min) to prevent backlash on the winch. The direction of the tow should be such that the wind and swells are taken at a 45 degree angle across the starboard bow to prevent the gear and wire from being run over by the ship and risking entanglement with the centerboard or screw. The depth of the nets are monitored from DataPlot and commands are given to standby and stop the winch at depth and begin retrieval when the gear has reached 100 meters or 10 meters off bottom. In the event that the SeaCat suddenly fails during a tow and there will not be time to repeat the tow, the wire out vs wire angle chart posted in DataPlot may be used to continue the tow (Table 1). The gear is brought back to the surface at 20 m/min. The ship speed is maintained between 1.5 and 2.0 knots and is continually adjusted to maintain a 45 degree wire angle. These angles are radioed to the Bridge by the Survey Tech who uses a hand held inclinometer to determine wire angle. The wire angles must be kept between 37 and 52 degrees to insure proper fishing of the gear. Low wire angles result in the frame moving too slow (larvae may avoid the nets). High wire angles result in the next moving too fast (larvae may be extruded through the net or avoid the net due to an increase in the frontal pressure wave). If the wire angle is outside these tolerances ($37 \leq x \leq 52$ °) for more than 30 seconds, then the catch should be discarded and the tow repeated. When

the nets surface, they are brought aboard and quickly washed. The nets and codends are inspected for damage and possible sample loss. The final flowmeter readings are recorded for each side of the bongo. The total flowmeter revolutions (final revolutions minus initial revolutions) for each flowmeter are calculated before the sample is preserved and should be within 100 - 200 counts of each other. Since net 1 is the only net that is used quantitatively and if there is a time restriction that does not allow the tow to be repeated, net 2 may be used in its place if there is a suspected problem with the flowmeter such as jellyfish tentacles wrapped around the flowmeter, slow gears, damaged codend, etc. Any changes to regular procedures, such as substituting net 2 for net 1, should be noted on the COD form. Problem flowmeter(s) should be replaced before the next station. Under normal operating conditions, the codend from net 2 is immediately taken into the laboratory and sorted for larval walleye pollock over an ice bed to reduce possible shrinkage of the fish larvae (Theilacker and Porter, 1995). Larval walleye pollock are counted and put into a vial of 95% ethanol for otolith studies. The codend from net #1 is the quantitative sample (recorded as QTowF on the COD form) that will be used for the larval abundance estimates. The codend contents of net #1 are carefully poured into a 505 _m mesh sieve to reduce the fluid enough to pour the sample into a 32 oz jar and preserve it with 50 ml of 37% formaldehyde and 20 ml of sodium borate used to buffer the solution (see Brown et al. 1999 for complete details on sample handling). In the event that the above specifications have not been met or it is suspected that the gear may have hit bottom or some of the sample was lost during the tow due to net or codend damage, the tow should be repeated. The scientists are responsible for recording tow time, maximum depths, and all other data required for the COD form. All station data is entered into a relational database (COD) soon after the tow. During the cruise, scientists will verify that the station data have been correctly entered by comparing the paper form with an edit form printed by the COD application. A digital record of the tow trajectory and maximum depth is archived for future reference (SeaCat files).

Protocol 5: Net and frame construction and repair

The 60 cm, MARMAP-style bongo frames used by AFSC are constructed by Ocean Instruments, Inc. The aluminum frames are nominally 60 cm in diameter. The actual mouth shape is ellipsoidal, rather than circular, with the vertical dimension being slightly larger than the horizontal. The average mouth area for our frames is 0.2891 m_. Schematic drawings for the frames are in development. A detachable lead 40 kg weight is shackled to the center pivot on the frame. There are two spare frames available in case of gear loss or a frame becomes damaged. The bongo nets are constructed by Research Nets, Inc. Schematic drawings are being developed. Attachment of the 505 um nets requires sliding the large open end of each net over the frame and securing with a stainless steel clamp. Once secured, any exposed areas on the clamp that may be sharp, such as the tightening screw, should be wrapped in electrical tape to prevent damaging of the net collar. A PVC codend with 505 um mesh is clamped to each net collar on the small end the nets. A flowmeter is mounted in the center of each mouth opening using heavy monofilament, nico-press sleeves, and then attached to eyebolts inside each of the frame openings.

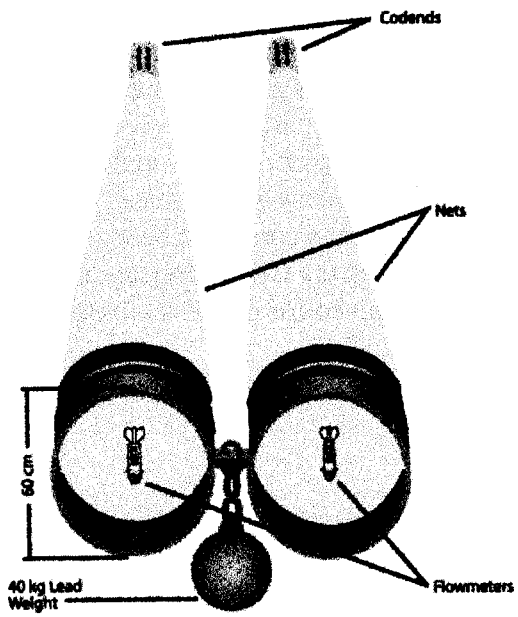

Each net is inspected for holes and tears before it is packed for field season use. If a hole or tear is found either on land or at sea, it is to be repaired by sewing on a patch of spare mesh of the same size and then a layer of silicon seal will be applied to cover the stitches to ensure that the patch will hold. The PVC codends are inspected after each tow for cracks and split bottom caps. If a codend is damaged then it is replaced between stations. Cod ends that are beyond patching with silicon seal or replacing the bottom cap, are sent out for repair or disposed of. A minimum of six codends will be packed for the field season for use through out the field season.

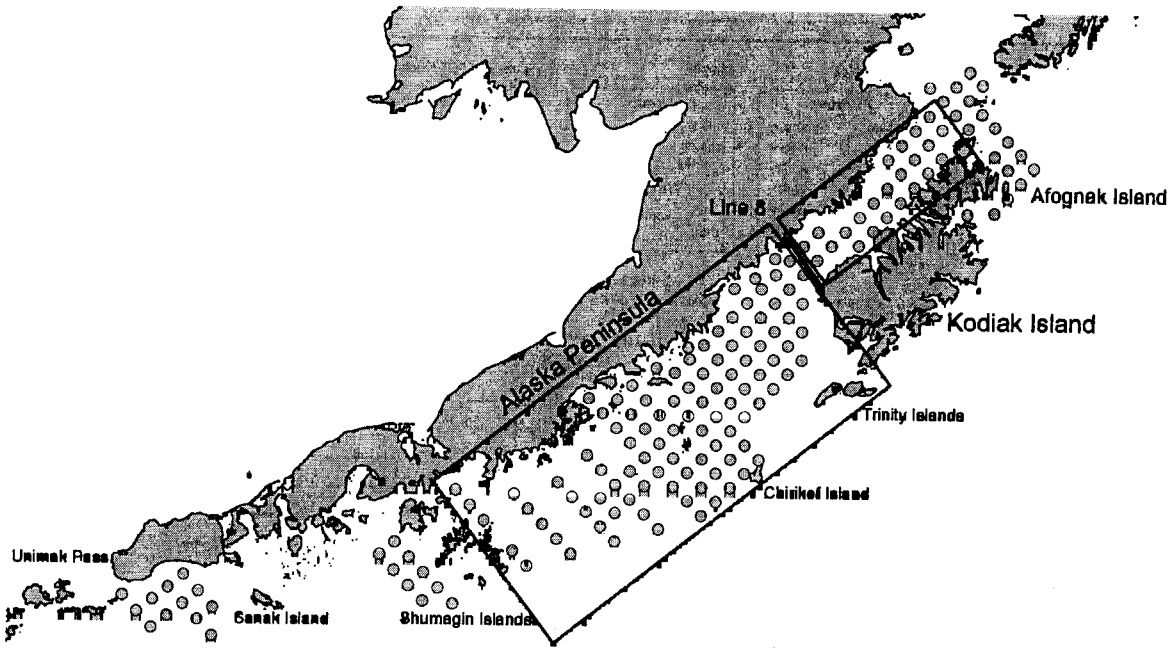

Figure 1. Larval walleye pollock survey grid. The main grid for the late larval survey is inside the two rectangles. Line 8 (between the two rectangles) is a historical sampling survey line consisting of 20 and 60 cm bongos and CTDs. Stations outside of rectangles are sampled if time permits or a special sample request is made.

Cruise Operations Database

Data Entered_____ Error Checked_____ Scientist_____

FOCI Cruise _____ (e.g 4MF99) Station _____ Haul ____ FOCI Station _____ (e.g HJ45 or FOX056) Alt. Station _____ (e.g. CTD015 or MOC004)

Ship's Cruise _____ (e.g MF99-06) GMT-Date _____ (e.g 20-May-99) GM-Time _____ Bottom Depth _____ m

DLat _____ MLat _____ ° N DLong _____ MLong _____ ° W

Haul Comments _____

Gear _____ Net _____ Mesh _____ µm *please see FOCI Field Manual for Gear abbreviations*

Performance	Purpose		Depth	Flowmeter	Tow Time
good	gridpre	pinksurv	min. _____ m	meter # _____	mess. net 0 _____
quest	grid	juvsurv	max. _____ m		at depth _____
fail	gridpost	adult		final rev. _____	haul in _____
lost	diel	gear	**Wire Out**	intial rev. _____	mess. net 1 _____
(explain if	drift	other	min. _____ m		
not good)	phys	*(explain)*	max. _____ m	Total _____	Total _____

Samples Collected

circle all samples collected PLUS fill in ProjectCode(s) (in the box) and NumberSampled (on the line when applicable)

Absorb		ChLAM		J-Length		Lugols		QTowF	*fish removed* Y / N
ADCP		Chlor		J-Oto		Merist		QTowS	TSG
A-Genet		CTD		J-Wght		MZ		RCountE	VideoNet
A-Gut		Deploy		L-Bioch		NetFluor		RCountJ	XBT
A-Length		Discard		L-Genet		Nut		RCountL	sample
A-Oto		EBKG		L-Gut		Ovary		Recovery	sample
Asound		EK500		L-Hist		PAR		ScanMar	sample
A-Wght		Fluor		Live		PhytoF		Shrink	sample
Brain		J-Genet		L-Musc		POC		SSF	sample
CAT		J-Gut		L-Oto		Pred		Strip	sample

CTDB Bottle Sample Info

please record all samples collected (each bottle should have its own record)

Depth	Chlor	Nut	MZ	other	other	Depth	Chlor	Nut	MZ	other	other
m	volume	bottle#	X	X	X	m	volume	bottle#	X	X	X
m	volume	bottle#	X	X	X	m	volume	bottle#	X	X	X
m	volume	bottle#	X	X	X	m	volume	bottle#	X	X	X
m	volume	bottle#	X	X	X	m	volume	bottle#	X	X	X
m	volume	bottle#	X	X	X	m	volume	bottle#	X	X	X
m	volume	bottle#	X	X	X	m	volume	bottle#	X	X	X

Gear _____ Net _____ Mesh _____ µm *please see FOCI Field Manual for Gear abbreviations*

Performance	Purpose		Depth	Flowmeter	Tow Time
good	gridpre	pinksurv	min. _____ m	meter # _____	mess. net 1 _____
quest	grid	juvsurv	max. _____ m		at depth _____
fail	gridpost	adult		final rev. _____	haul in _____
lost	diel	gear	**Wire Out**	intial rev. _____	mess. net 2 _____
(explain if	drift	other	min. _____ m		
not good)	phys	*(explain)*	max. _____ m	Total _____	Total _____

Samples Collected

circle all samples collected PLUS fill in ProjectCode(s) (in the box) and NumberSampled (on the line when applicable)

A-Genet		Brain		J-Length		L-Gut		QTowF	*fish removed* Y / N
A-Gut		CAT		J-Oto		L-Hist		QTowS	RCountL
A-Length		Discard		J-Wght		L-Musc		Pred	Shrink
A-Oto		J-Genet		L-Bioch		L-Oto		RCountE	sample
A-Wght		J-Gut		L-Genet		Merist		RCountJ	sample

Figure 2. Cruise operations database (COD) paper form used at sea. The data are entered into a relational database application (Access) and verified at sea.

Table 1. Amount of wire needed to reach a specified net depth with a wire angle of 45 degrees. Depths and wire out numbers are in meters.

Desired Net Depth	Wire Out	Desired Net Depth	Wire Out	Desired Net Depth	Wire Out	Desired Net Depth	Wire Out
5	7	**155**	219	**305**	431	**455**	643
10	14	**160**	226	**310**	438	**460**	651
15	21	**165**	233	**315**	445	**465**	658
20	28	**170**	240	**320**	453	**470**	665
25	35	**175**	247	**325**	460	**475**	672
30	42	**180**	255	**330**	467	**480**	679
35	49	**185**	262	**335**	474	**485**	686
40	57	**190**	269	**340**	481	**490**	693
45	64	**195**	276	**345**	488	**495**	700
50	71	**200**	283	**350**	495	**500**	707
55	78	**205**	290	**355**	502	**505**	714
60	85	**210**	297	**360**	509	**510**	721
65	92	**215**	304	**365**	516	**515**	728
70	99	**220**	311	**370**	523	**520**	735
75	106	**225**	318	**375**	530	**525**	742
80	113	**230**	325	**380**	537	**530**	750
85	120	**235**	332	**385**	544	**535**	757
90	127	**240**	339	**390**	552	**540**	764
95	134	**245**	346	**395**	559	**545**	771
100	141	**250**	354	**400**	566	**550**	778
105	148	**255**	361	**405**	573	**555**	785
110	156	**260**	368	**410**	580	**560**	792
115	163	**265**	375	**415**	587	**565**	700
120	170	**270**	382	**420**	594	**570**	806
125	177	**275**	389	**425**	601	**575**	813
130	184	**280**	386	**430**	608	**580**	820
135	191	**285**	403	**435**	615	**585**	827
140	198	**290**	410	**440**	622	**590**	834
145	205	**295**	417	**445**	629	**595**	841
150	212	**300**	424	**450**	636	**600**	849

Literature Cited

Brown, A., L. Britt, and J. Clark. 1999. FOCI field manual. AFSC Processed Report 99-01.

Smith, P.E. and S.L. Richardson. 1977. Standard techniques for pelagic fish egg and larva surveys. FAO Fish. Tech. Pap. No. 175: 1-99.

Theilacker, G.H. and S.M. Porter. 1995. Condition of larval walleye pollock, *Theragra chalcogramma*, in the western Gulf of Alaska assessed with histological and shrinkage indices. Fisheries Bulletin 93: 333-344.

Appendix 2

December 24, 2003

Southwest Regional Standard Operating Protocols for:
CalCOFI Surveys
Cowcod Conservation Area Surveys
DEPM Sardine Biomass Surveys

Prepared by Personnel from NOAA Fisheries
Southwest Fisheries Science Center

Introduction

The Southwest Fisheries Science Center's (SWFSC) Fisheries Resources Division (FRD) conducts several ichthyoplankton surveys which produces either an index of abundance or calculates a daily egg production estimate used for calculating a standing biomass estimate. The CalCOFI (California Cooperative Oceanic Fisheries Investigations) time series initiated in 1948, collects ichthyoplankton data at pre-specified station positions using Bongo gear (oblique tow), Pairovet gear (vertical tow) and Manta gear (neuston tow). In addition to the station samples, underway sampling (CUFES) is conducted during the spring survey to estimate Pacific sardine (*Sardinops sagax*) biomass. Each survey is conducted on a quarterly basis and covers a region from the California - Mexico border to Point Conception, Monterey Bay or San Francisco depending on the time of year.

In 1998, the PFMC (Pacific Fisheries Management Council) declared cowcod (*Sebastes levis*) as an overfished resource. The FRD at the SWFSC began a three year study beginning in 2002 of the cowcod conservation area located within the Southern California Bight. February of 2004 will conclude the three year survey at which time a determination will be made in regards to the status of the conservation area.

The final ichthyoplankton survey conducted by the SWFSC is the annual Pacific sardine biomass estimation. These surveys are generally conducted over a thirty day period spanning the months of March and April. The California Department of Fish and Game is mandated by the PFMC to monitor and manage the stock under the Coastal Pelagic Species Fisheries Management Plan. SWFSC's roll is to supply scientific support in the form of data collection, analysis and implementation. The foundation of the estimates is based around a series of vertical ichthyoplankton tows (Pairovets) performed in conjunction with the CUFES. Since the surveys are done usually in tandem with CalCOFI, a thorough description is created of the California Current through the collection of oceanographic, biological and sardine biomass data from the California - Mexican border to Point Reyes and offshore approximately 200 miles.

Since all of these surveys rely heavily on the ichthyoplankton sampling design created within the CalCOFI framework, it is not necessary to describe each survey but rather to describe the specific sampling procedure, which then applies to any and all ichthyoplankton surveys conducted by the SWFSC.

Protocol 1: Determination of gear depth

In conforming to protocol 1of the "NOAA Protocols for Ichthyoplankton Surveys", SWFSC will use redundant measurements of wire rope prior to any survey in which ichthyoplankton is collected. At least one of these redundant measurements will measure the wire in real-time. The methods of choice will vary from ship to ship depending on the ship board metering system in place.

Sub-Protocol 1a: Wire measurement verification:
The majority of the vessels used by the SWFSC for ichthyoplankton surveys possess real-time electronic wire meter located on the winch fairlead. Prior to each cruise, a 100 pound steel weight will be suspended on the wire and held just at the waterline. An inline calibrated wire meter (Olympic Instruments model 1420, 1700 or 750-N) will be placed on the wire just off of the drum and secured. At a constant rate of 20 meters/minute, the weight will be lowered to a depth of 100 meters using the electronic readout. The reading from the inline wire meter will be recorded. At a constant rate of 20 meters/minute the wire will be let out to a terminal reading of 200 meters on the electronic readout and the mechanical meter will be recorded. The wire will then be retrieved at 20 meters/minute stopping at 100 meters and at the surface, reading the mechanical output at each of those stops. Any discrepancies greater than 1% between the mechanical and electronic readings will require that the calibration constants in the electronic systems be changed to reduce the discrepancies. If it is not possible to change calibration constants, the offset will be noted and used during each tow.

In instances when the offset is significant or there is a history of wire slippage, SWFSC uses the above method to measure the wire and adds additional wire markings such as spray paint, to mark the wire at constant intervals and specifically at critical endpoints such as at 300 meters for bongo tows.

Periodically, SWFSC will place Wildlife Computers MkIII TDRs (or similar) on the ichthyoplankton frames and make repeated descents with a 0% wire angle and compare the TDR reading with that of the expected wire out reading from the electronic wire measurement systems.

Sub-Protocol 1b: Care of the calibrated wire counters:
On an annual basis, the wire meters will be returned to the manufacturer for refurbishment (if necessary) and re-calibration. If this is not possible and there is a concern as to the calibration of the wire counter, a field check can be accomplished in the following manner:

The counter can be calibrated using a known length of wire (at least 20 meters) measured with standard metric tape measure as follows: 1) set the 100 pound weight in the water with the ship still in the water. It would be best if this is done during calm seas to ensure that there is no wire slippage due to the ship's roll, 2) mark the wire with a piece of tape near the winch sheave, 3) measure from this mark forward, in increments, until a distance of at least 20 meters of wire has been measured, then again mark with tape, 4) attach the meter to the wire in an accessible location and secure fore and aft with rope, 5) measure the marked distance with the inline meter three times and 6) calculate a calibration coefficient from the average of the three measurements.

Protocol 2: Ichthyoplankton gear using telemetry

SWFSC possesses both a 1 m_ and a 10 m_ MOCNESS used for ichthyoplankton surveys, and larval and juvenile fish surveys. At this point, the MOCNESS are not used in the determination of a population index or calculation of a biomass estimate. However the sensors and flowmeter are calibrated on a routine basis either annually or if not used on an annual basis, just prior to the start of a survey.

Sub-Protocol 2a: Pressure sensor:
The pressure sensor, or strain gauge is tested and calibrated at the Norpax facility on the campus of Scripps Institution of Oceanography.

Sub-Protocol 2b: Flowmeter calibration:
All flowmeters, whether viewed in real-time such as the electronic TSK® flowmeters mounted on the MOCNESS frame or read manually such as the General Oceanics 2030R mechanical flowmeters are calibrated in the same manner. All flowmeters are calibrated prior to and immediately following all cruises in which they are used. SWFSC uses the method described in Kramer, et al. (1972) with slight changes over the years to methodology and gear type. For calibration, a flowmeter(s) is moved through the water at different speeds over a measured distance. Our personnel have developed a method for calibrating two flowmeters at a time by fastening them to a bracket at the end of an aluminum pole and moving them through the water over the measured distance of 16 meters. Since the calibrations are performed dockside, the measured distance is traversed in both directions to eliminate any effect that a changing tide might have on the calibration. The meters are moved through the water over the 16 meter distance at various speeds beginning at 14 seconds to cover the 16 meters to 36 seconds to cover the distance. Each rate is covered in both directions and in two second intervals. That is, the first up and back run is covered in 14 seconds each way, the next is covered in 16 seconds, then 18 seconds and so on up to 36 seconds. Therefore each flowmeter will experience a total of 24 separate runs along the 16 meter measurement. The results are then graphed with the independent variable being the length of a column of water needed to affect one revolution of the meter at any given tow speed. The graph is based on the average of two calibration trials (pre-cruise and post-cruise). The graph is curvilinear with the highest values of meters/revolution associated with the lowest numbers of revolutions/second because of friction at low speeds. The calibrations are plotted as a regression line where meters per revolution are plotted against seconds per revolution in order to linearize the relationship over the range of values obtained in all the plankton tows for which the meter was used.

Sub-Protocol 2c: Inclinometer adjustments:
The adjustment of the pendulum type inclinometer on the MOCNESS is fairly simple and straight forward. The main requirement is the availability of a calibrated hand held inclinometer. SWFSC applies the hand held inclinometer used for measuring wire angles for the Pairovet tows. This in turn is calibrated by using a bubble level, which has level measurements at 90% and 45%. When the MOCNESS is sitting in the deck mounted cradle, the inclinometer is held against the frame to measure the angle. The processor canister is then rotated until the data

c. Duration or distance of tow

i. Bongo (oblique) tow

The protocol for the amount of water strained by the bongo net is determined by several factors. Time, which relates to wire speed; and wire angle, which relates to speed through the water. If all factors meet the targeted values then a final flowmeter count of 3500 to 4500 should be realized for a full tow down to 212 meters depth. If it is necessary to refer to the above chart due to a shallow station, then the duration of the tow will be related to the amount of wire to be paid out.

ii. Manta (neuston) tow

Since the manta tow is not restricted by bottom depth, all tows, from the time the flowmeter begins spinning until the time it stops last fifteen minutes.

iii. Pairovet

The standard Pairovet tow is conducted as a vertical cast down to 70 meters. The criteria used to conduct the tow are quite structured and relies on the following guidelines. For a full tow the down cast duration is one minute. The wire is then stopped and held for ten seconds and retrieved. The upcast duration should also be one minute, therefore the entire tow takes two minutes and ten seconds. On those occasions when a full cast is not possible due a shallow station, the terminal depth of the cast will be adjusted to the next shallower depth, in ten meter increments, above the bottom and the duration of the tow is adjusted accordingly.

d. Direction of tow

The direction in which the ship travels during any ichthyoplankton tow will be determined by weather conditions, primarily wind and swell direction. It will be the responsibility of the ship operator to decide the best and safest course to take for each tow. When weather does not factor into the decision, if possible, towing towards the next station would be the favorable choice.

e. Location of sampling sites

CalCOFI uses a fixed grid pattern that was developed in 1950. The grid extends from the tip of Baja California to the California - Oregon border and offshore approximately 400 nautical miles. Since 1985 a core station group was establish which covers six cardinal lines within the Southern California Bight. These lines are occupied on a quarterly basis, which is comprised of 66 core stations. In recent years SWFSC has expanded this basic pattern to encompass a growing sardine (*Sardinops sagax*) population to the north of the core pattern during the winter and spring surveys. During these cruises, the station choice continues to be determined from the original grid pattern of 1950. Prior to any survey, the station latitudes and longitudes are sent to the ship's navigator to be loaded into the shipboard GPS (Global Positioning System). CalCOFI protocol allows for a variance of up to two miles from station for offshore stations and approximately 1mile for the more closely spaced inshore stations.

f. Criteria for determining the success of a tow and procedures to use if a tow is considered unsuccessful

A tow is deemed successful if all of the elements requested (wire angle, wire speed, total time and flowmeter range) are met. There are some hard fast rules, which will immediately reject a tow:

i. A tare in the lower third of the net two inches or larger in length.

ii. A tear in the codend of one half inch or larger in length

iii. A lost codend.

iv. If the wire is stopped at anytime during an oblique or vertical tow, the tow is rejected. The stoppage can be the result of a mechanical problem with the winch, the wire tending under the ship as the frame reaches the surface or operator error.

v. If a net gets wrapped around either the wire or the frame so that the water flow is not directed into the codend, a decision must be made to accept or reject the tow by the FPC. If the flowmeter reading is within range of acceptable counts, most likely the tow will be retained.

vi. If the wire angle exceeds the desired range of values to an extent that the FPC feels that the sample has been compromised.

In the case of a rejected tow, the Chief Scientist or FPC must make the decision to whether the tow can be redone. In most cases the tow or cast will be repeated unless circumstances (time, weather or mechanical problems) prevent it from being done.

SWFSC uses a coding system that will establish the quality of the tow and these codes are entered into the database. The codes are as follows:

0/0 - No sample loss/flowmeter reading acceptable

1/0 - All or partial sample loss/flowmeter reading acceptable

0/9 - No sample loss/flowmeter malfunction or damaged

1/9 - All or partial sample loss/flowmeter malfunction or damaged

Only in the case of codes 1/0 and 1/9 will the tows be redone. For code 0/9 when entered into the data acquisition software, the software will enter an average flowmeter reading taken from all other tows with the same total time and the same flowmeter serial number.

g. Vessel and winch operation during gear deployment and retrieval

To ensure comparability between vessels and years, ship operators will be asked to follow standard procedures when setting, towing and retrieving the gear. These procedures will be

established at the beginning of the first leg by the captain or master and the FPC and must be maintained throughout the survey and for all subsequent surveys.

The criteria for all ichthyoplankton tows conducted by the SWFSC in accordance with the CalCOFI standards rely on specific protocols and standards. The quality and acceptance of each tow is determined by a specific range of values for each type of tow. Essentially, all tows rely on the angle of stray and the wire rate of deployment and retrieval, which directly impacts the total time of tow. No specific restrictions, such as engine rpm or direction of tow are communicated to the ship operators as to how these tow criteria are achieved. Each tow must be approached individually as to how the standards will be met dependant upon ship's capability, weather, station position (bottom depth), etc. Each type of ichthyoplankton tow carries specific guidelines that are to be met for each station regardless of time of year or vessel. They are as follows:

i. Bongo (oblique) tow - with no depth restrictions
- angle of stray range from 37% - 52% within the final 100 meters of wire out on ascent
- downcast time of six minutes
- hold at depth for 30 seconds
- retrieval time of 15 minutes
- downcast wire speed of 50 meters per minute
- wire retrieval rate of 20 meters per minute
- 300 meters of wire out
- acceptable flowmeter range of 3500 to 4500 revolutions
- initial ship speed of 1.5 - 2.0 knots

ii. Manta (neuston) tow
- initial ship speed of 1.5 - 2.0 knots
- angle of stray range from 15% to 25%
- tow time of 15 minutes
- acceptable flowmeter range of 1500 - 2500

iii. Pairovet (vertical) tow
- ship dead in water
- angle of stray range from 0% to 15%
- descent rate of 70 meters per minute
- held at depth for ten seconds
- ascent rate of 70 meters per minute
- 70 meters of wire out

i. <u>Ichthyoplankton gear construction plans, at-sea repair instructions and repair verification checklist</u>

Since major repairs to the ichthyoplankton survey frames would be difficult at best to repair at sea, SWFSC always brings at least one and usually two backup frames per cruise. If damage occurs to any of the frames, it is the responsibility of the FPC to determine whether the frame should be repaired or replaced. Gear construction plans, such as those in the following protocol, are always brought out to sea for possible references of damaged gear.

Most net repairs can be accomplished at sea if they are not too severe. Again this decision is left to the FPC whether to repair or replace. If repairable, small holes and cuts can be repaired by using a silicone adhesive to close the damaged area. Large tears should be sewn first with sail mending thread and then coated with a small amount of silicone adhesive. Nets damaged in areas that are difficult to repair such as the nylon collar / Nytex mesh interface should be replace prior to the tow. And of course severe damage to any net would require replacement.

SWFSC uses tow data sheets for each tow conducted that require the operator to inspect the nets for holes, rips or any other damage and if found, requires that action be taken prior to the next tow and what that action was. The follow illustration represents a standard tow data sheet used in the field:

BONGO TOW SHEET EXAMPLE

NET TOW DATA SHEET

CRUISE	SHIP	ORDER OCCUPIED	STATION LINE STATION	DATE YR MO DY	HOUR (PST) BEGIN TOW	END TOW
9608	MK	1	97.0 50.0	96-08-01	0100	0121 30

TIME min. sec.	MESH	PORT	STB. 505	TOW TYPE: CALBOBL
SINKING (descend) 6 ' 00 "	NET NO.	CB0503	CB0504	TOW NO. 1 OF 1
TOWING (at depth) 15 ' 30 "	METER NO.	11978	11979	BUCKET TEMP. °C: 16.0
TOTAL (ascend) 21 ' 30 "	CARRYOVER	OK	OK	BOTTOM DEPTH 1000 meters / fathoms
AMT. OF WIRE OUT 300 meters	FINAL	41222	51236	
	INITIAL	37422	47436	ACCEPTED POSITION latitude 31° 32.5' N longitude 118° 18.0' W
TOTAL NO. OF ANGLES 30	DIFF.	3800	3800	
	ERROR CODE	0/0	0/0	OBSERVER: AEH

ANGLES	45	45	45	47	46	45	45	44	43	42	41	42	42	44	45
WIRE OUT	300	290	280	270	260	250	240	230	220	210	200	190	180	170	160
ANGLES	45	45	46	46	47	48	48	46	45	45	44	44	45	44	45
WIRE OUT	150	140	130	120	110	100	90	80	70	60	50	40	30	20	10
ANGLES															
WIRE OUT	depth	half	surf.			250					200				
ANGLES															
WIRE OUT	150					100					50				

NO. OF JARS PORT	STB.	NET CLOGGING (check 1)	none or slight	moderate	heavy	very heavy	WIND direction	knots
1	1 Q		x				300°	5

FORMALIN & BORATE ADDED		NET WASHING (check 1)	none	rinsed	washed	SKY (condition)
AEH	AEH			x		SUNNY

~~ALCOHOL~~	~~ADDED~~	RIPS AND HOLES IN NET	none	location:		SWELL direction	height FT.
			x	when mended: before sta	after sta	310°	2
COLLECTORS	INIT.					SEA (condition)	
AEH	AEH					CALM	

REMARKS: Anything you wish to add about the tow.

j. Defining responsibility (i.e. survey scientists or vessel crew) for decisions regarding various aspects of the operations

The FPC will oversee all aspects of the survey operation. Final decisions regarding station locations and station scheduling are the responsibility of the FPC. Vessel operation, trawl gear deployment and retrieval, and all matters related to vessel safety will be the responsibility of the vessel Captain or Master.

It is the responsibility of both the FPC and the command of the vessel to keep lines of communication open between survey vessels, not only for safety purposes, but to ensure that all operations are proceeding in the manner outlined here.

Protocol 5: Net and frame construction

The current design of ichthyoplankton frames for SWFSC was determined in 1986. Prior to this finalized drawing, there were many variations and experimentations that ultimately arrived at the designed used today. The following illustrations are used for construction of all new frames, nets and inclinometers in order to maintain a continuity of sampling systems. Presently, Ocean Instruments, Inc. constructs all frames and nets are fabricated by Ullman Sails in San Diego. The ability to have construction of critical gear performed by the same fabricator ensures the consistency in design, materials and quality of work.

The main change in net construction has been the change from silk mesh to a synthetic nylon mesh. The basic design itself has varied little over the last several years. The majority of the nets are constructed of a mesh size nominal 505 &m for the bongo and manta frames and a nominal mesh of 150 &m for the Pairovet. All new construction of nets and frames closely adheres to the following drawings detailing their construction.

71 cm diameter Bongo frame descriptions

CALCOFI BONGO NET FRAME CONSTRUCTION (NMFS-SWFC VERSION 10/86)

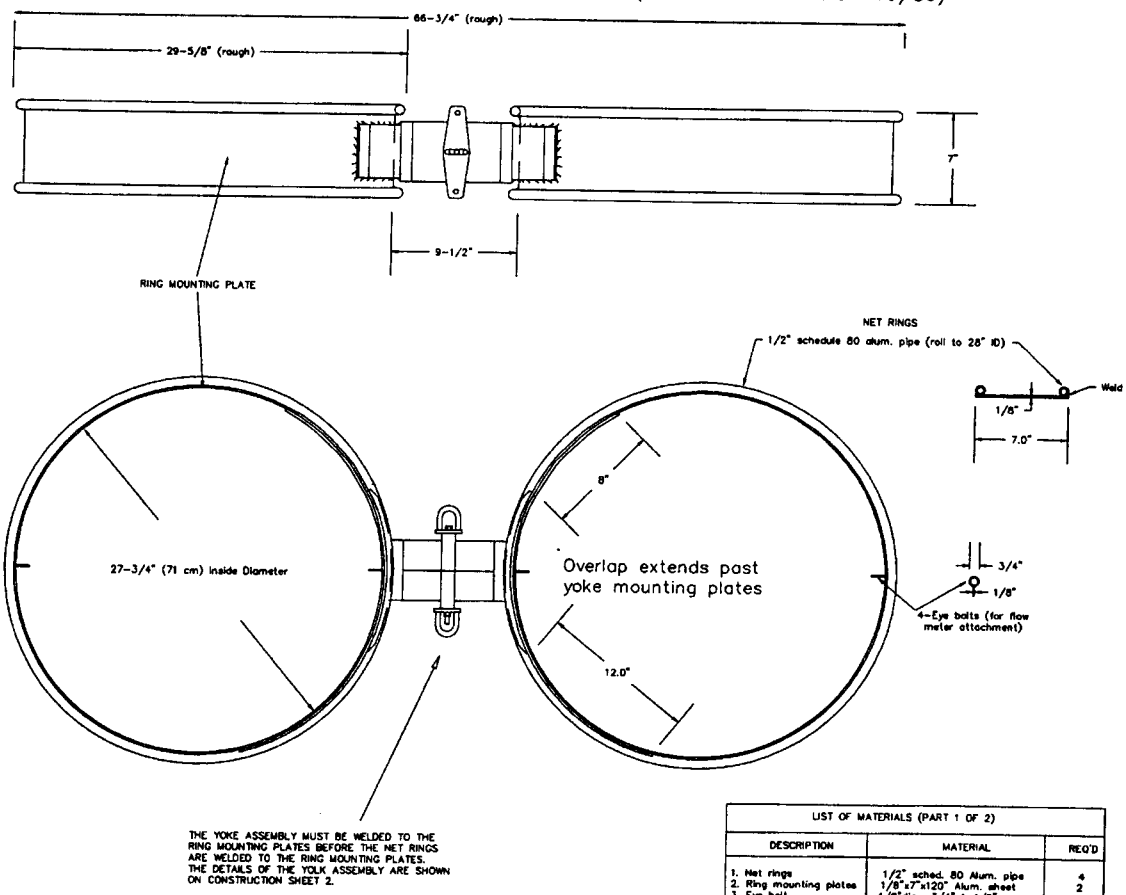

LIST OF MATERIALS (PART 1 OF 2)		
DESCRIPTION	MATERIAL	REQ'D
1. Net rings	1/2" sched. 80 Alum. pipe	4
2. Ring mounting plates	1/8"x7"x120" Alum. sheet	2
3. Eye bolt	1/8"dia. x3/4"x1-1/2" s.s.	4

CALCOFI BONGO NET FRAME CONSTRUCTION (NMFS-SWFC VERSION 10/86)

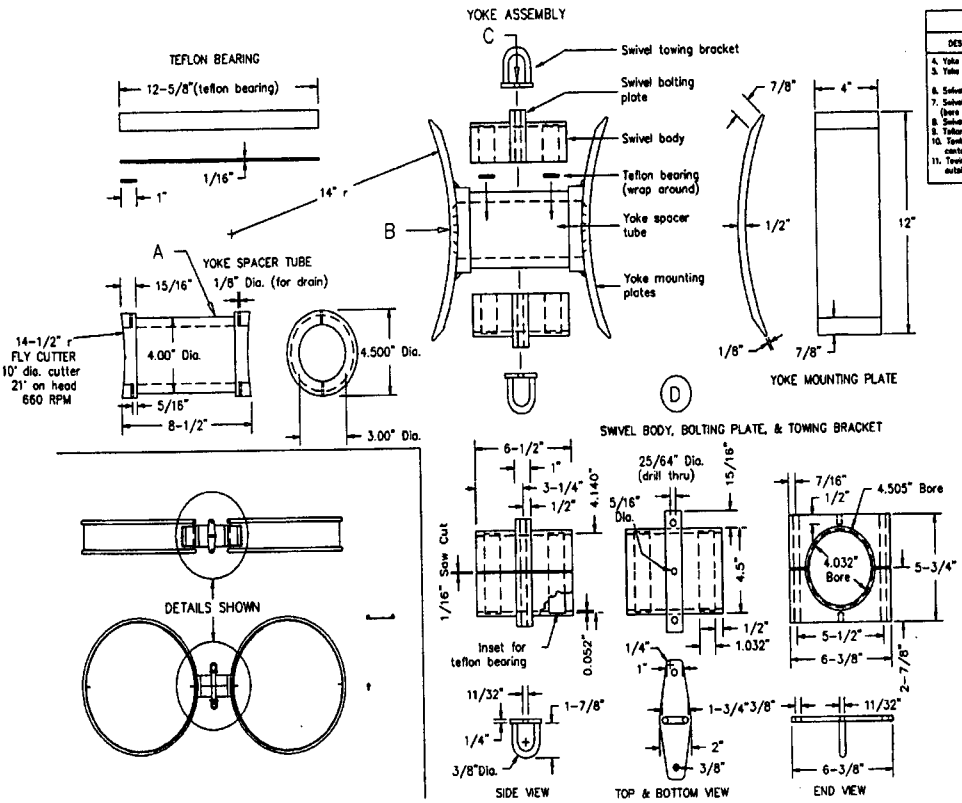

LIST OF MATERIALS (PART 2 OF 2)		
DESCRIPTION	MATERIAL	REQ.
4. Yoke mounting plates	1/2"x4"x12" Alum.	2
3. Yoke spacer tube	4-1/2"x3/4"wallx8-1/2" 6061-T6 Alum. tubing	1
6. Swivel body	4-1/2"O.D.x1/4"wallx8-1/2"	1
7. Swivel bolting plate (bore and weld to 6.)	1"x6-3/8"x5-3/4" plate	1
8. Swivel towing bracket	1/4"x2"x6-3/8" S.S.	2
9. Teflon bearing	1/16"x1"x12-5/8" Teflon	2
10. Towing bracket center bolt	5/16"Dia.x3/4" S.S.	1
11. Towing bracket outside through bolts	3/8"x7-1/4" S.S. with lock nut fasteners	2

NOTE (A)

A. Polish surface before welding to yoke mounting plates, hand polish after welding.

NOTE (B)

B. To make yoke mounting plates roll a ring 1/2"x4"x28"I.D. of 6061-T6 aluminum & cut into 12" long pieces.

NOTE (C)

C. Attach yoke assembly parts together with 2 S.S. bolts 3/8"x7-1/4" fasten with lock washers & nuts.

NOTE (D)

D. SEQUENCE OF MANUFACTURING
1. Bore & drill swivel bolting plate
2. Weld swivel body to swivel bolting plate.
3. Saw assembly in half as shown and grind edges.
4. Bolt halves together & bore tube.
5. Undercut tube.

Bongo net design for 71 cm frame

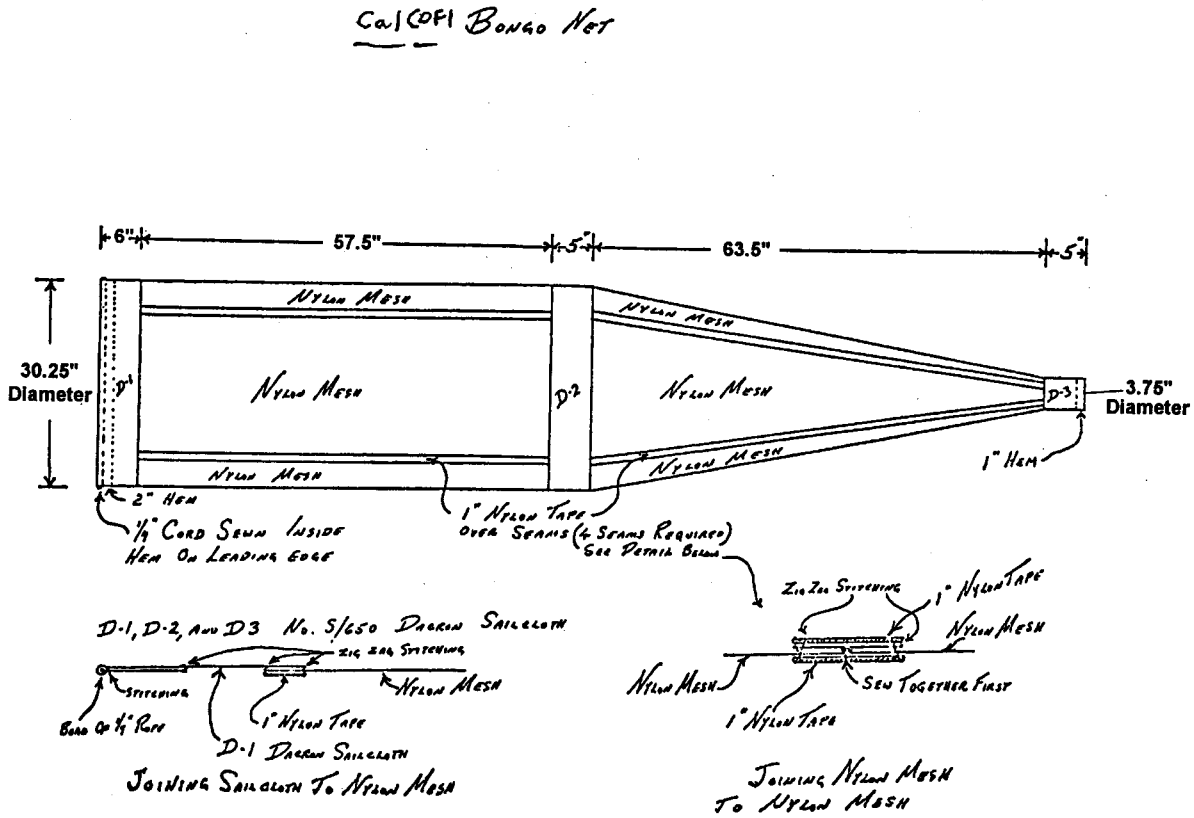

1.33m_ mouth opening Manta frame

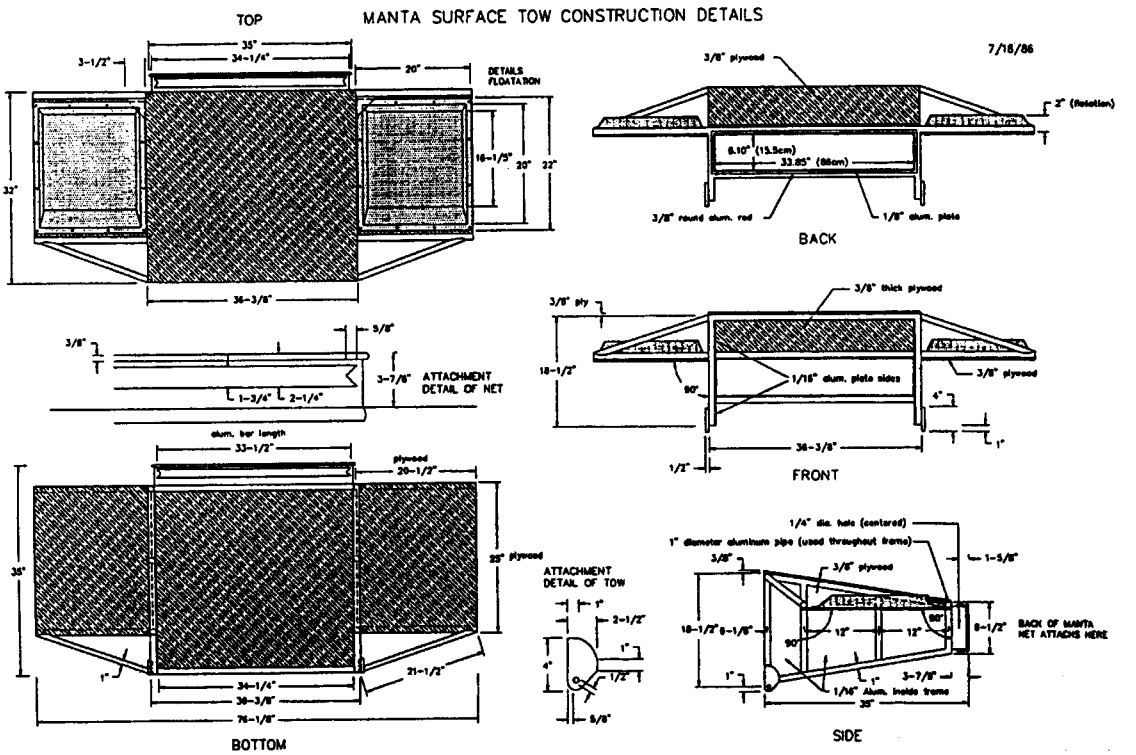

Detailed drawings of 25 cm diameter Pairovet frame

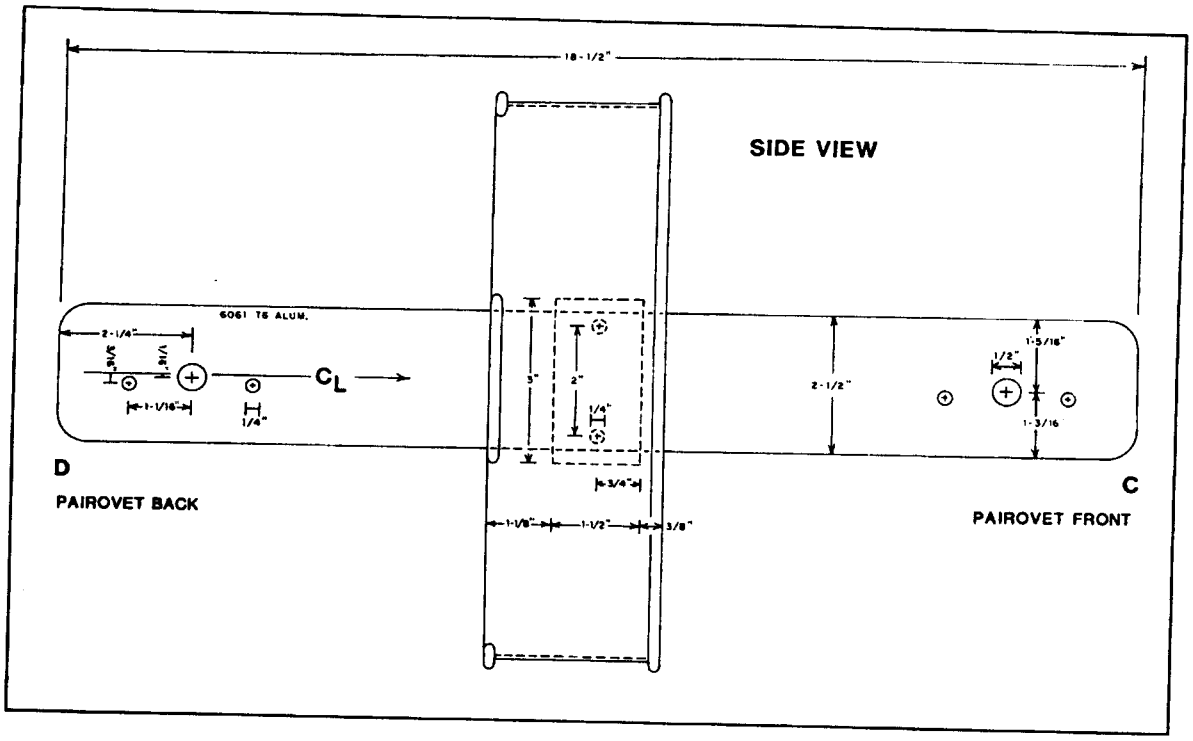

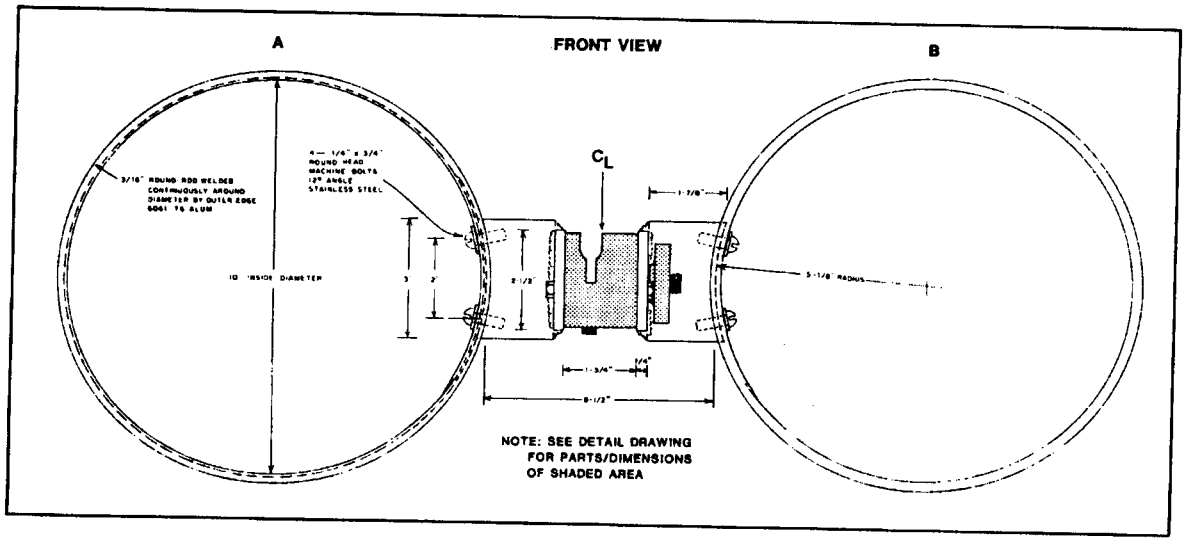

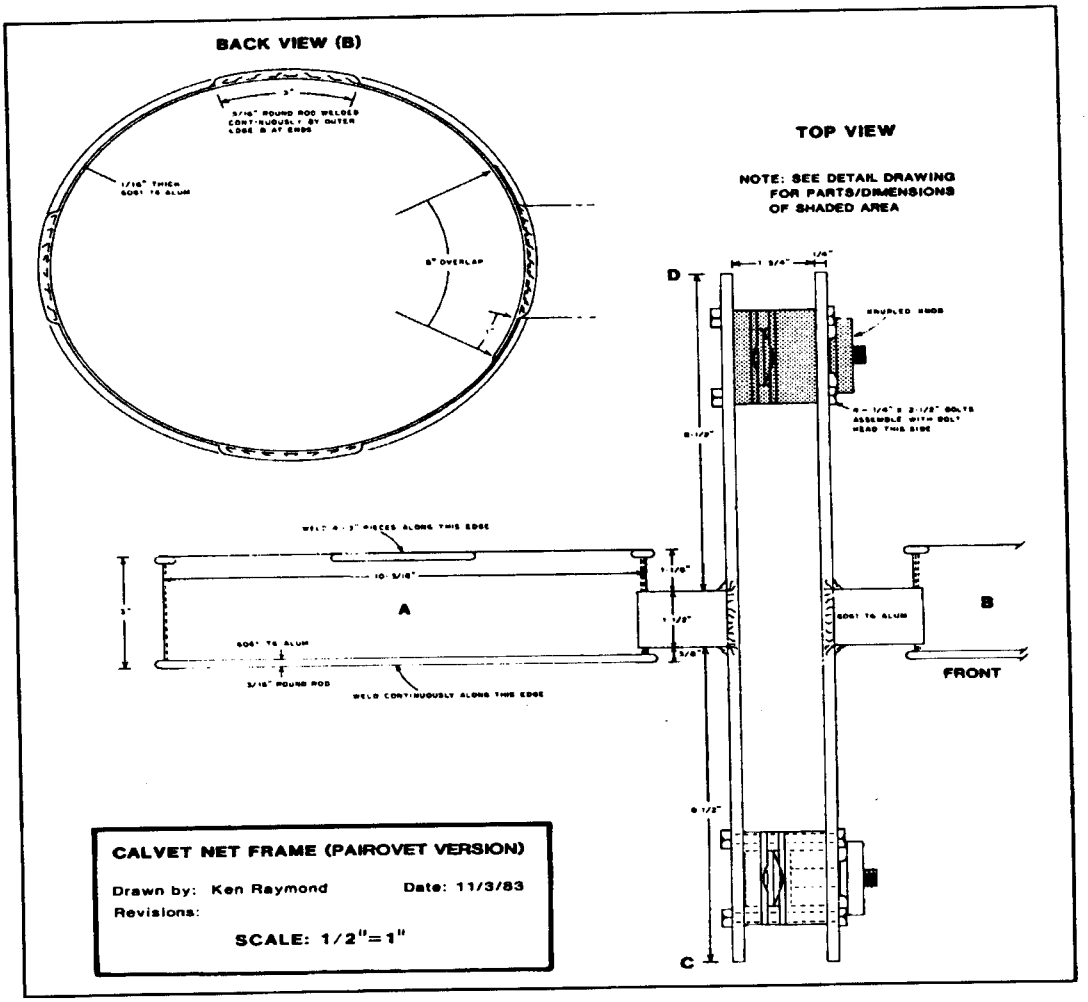
BACK VIEW (B)
TOP VIEW
NOTE: SEE DETAIL DRAWING FOR PARTS/DIMENSIONS OF SHADED AREA
D
C
A
B
FRONT
CALVET NET FRAME (PAIROVET VERSION)
Drawn by: Ken Raymond
Date: 11/3/83
Revisions:
SCALE: 1/2"=1"

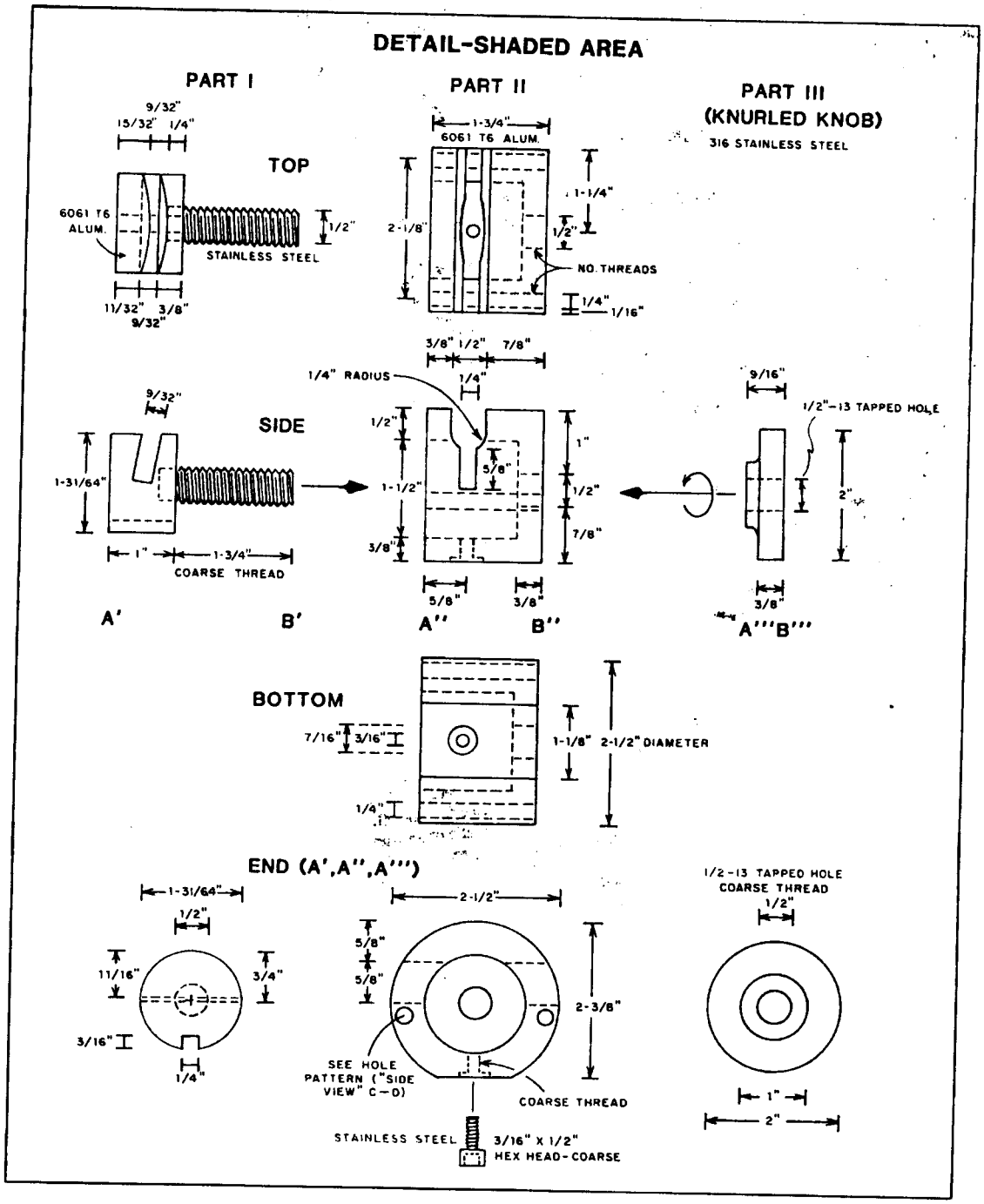
DETAIL-SHADED AREA
PART I
PART II
PART III
(KNURLED KNOB)
316 STAINLESS STEEL
TOP
6061 T6 ALUM.
STAINLESS STEEL
6061 T6 ALUM.
NO. THREADS
SIDE
1/4" RADIUS
COARSE THREAD
1/2"-13 TAPPED HOLE
A'
B'
A''
B''
A'''B'''
BOTTOM
1-1/8"
2-1/2" DIAMETER
END (A',A'',A''')
SEE HOLE PATTERN ("SIDE VIEW" C-D)
COARSE THREAD
STAINLESS STEEL
3/16" X 1/2"
HEX HEAD-COARSE
1/2-13 TAPPED HOLE
COARSE THREAD

Detailed drawing of 25 cm diameter Pairovet net

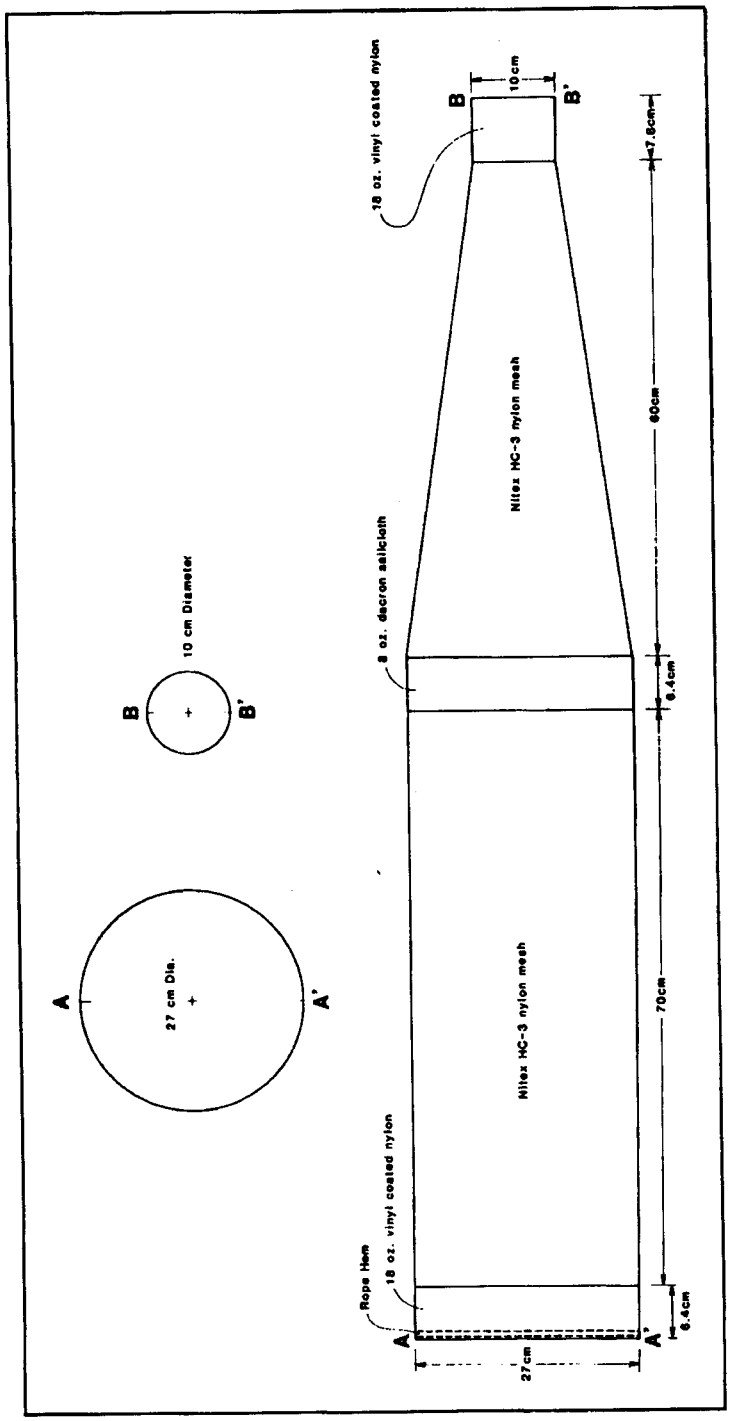

Detailed illustration of mechanical wire inclinometer

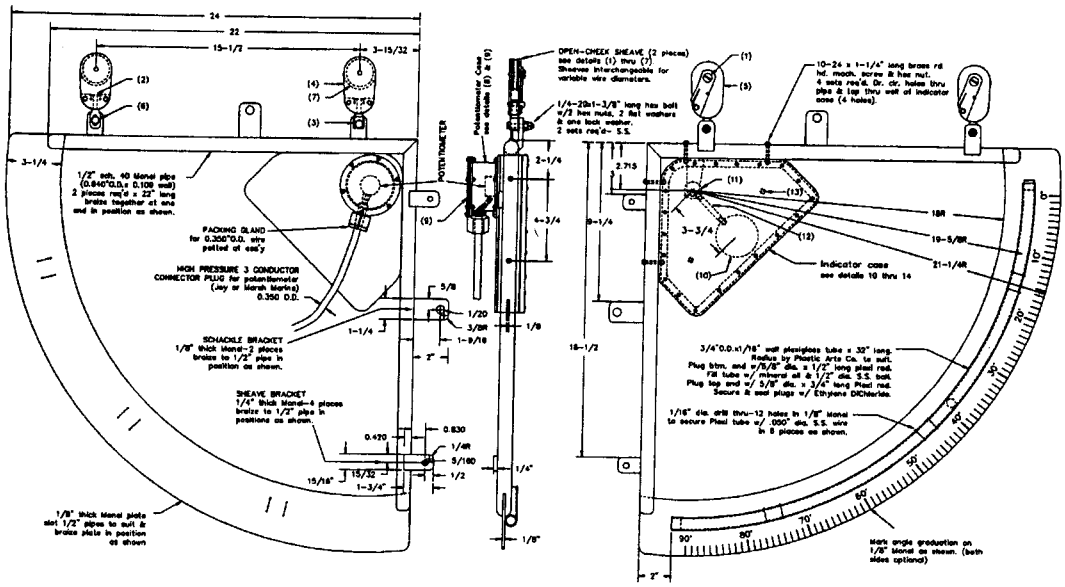

Literature Cited

Kramer, D., M. J. Kalin, E. G. Stevens, J. R. Thrailkill, and J. R. Zweifel. 1972. Collecting and processing data on fish eggs and larvae in the California Current region. NOAA Tech. Rep. NMFS. Circ. 370: 1 - 38.

Lasker, R., ed. 1985. An egg production method for estimating spawning biomass of pelagic fish: application to the Northern anchovy, *Engraulis mordax*. NOAA Tech. Rep. NMFS. 36: 1-100.

Smith, P. E. and S. L. Richardson. 1977. Standard techniques for pelagic fish egg and larva surveys. FAO Fish. Tech. Pap. No. 175: 1 - 99.

Appendix 3

December 24, 2003

Northeast Regional Standard Operating Procedures for: Ecosystem Monitoring Program

Prepared by Personnel from NOAA Fisheries
Northeast Fisheries Science Center

Introduction

The NEFSC Ecosystem Processes Division conducts Ecosystem Monitoring Program surveys six times per year. The program samples ichthyoplankton along with zooplankton, chlorophyll a and collects data on environmental parameters. The surveys provide information on abundance and distribution of early life history stages of commercially important species and the ichthyoplankon community and contribute to data on essential habitat. The surveys are conducted jointly with NEFSC bottom trawl surveys in spring and fall and on 4 dedicated Ecosystem Monitoring surveys. The area of coverage is from Cape Hatteras to the Gulf of Maine.

Protocol 1: Determination of gear depth

Wire deployed information is provided by an in line meter block mounted on the boom which provides wire out and deployment and retrieval rates of wire. The display for the boom meter block is mounted in the winch house and it is the responsibility of the winch operator to maintain the appropriate rates of deployment and retrieval. Sampling depth is determined via an instantaneous readout of a Seacat Conductivity Temperature Pressure (CTD) profiler with information on gear depth and data on conductivity and temperature on each tow. Generally maximum tow depth is to within 5m of bottom or to a maximum of 200m. The former may be adjusted during rough weather or in areas of rough bottom.

Protocol 2: Ichthyoplankton gear using telemetry

Sub-Protocol 2a: Flowmeter calibrations:
Flowmeters are calibrated annually in a tow-tank. The flowmeters are suspended beneath a movable carriage and towed at about 2.8 km/hr to correspond to target tow speed during survey operations. A series of ten tows is performed, each consisting of a tow in both directions over a total distance of 30.48 m (100 ft). Several flowmeters can be towed at once. After each tow the revolutions of each flowmeter are recorded to the nearest whole revolution (the right-most digit registers a tenth revolution and is ignored). A flow meter calibration factor is calculated for each flowmeter, which is identified by a unique 5-digit serial number, provided by the manufacturer. The units of the calibration factor (meters per revolution) were chosen so that the factor would be applicable to nets of different mouth area for obtaining volume of water filtered.

Sub-Protocol 2b: Adjustment of electronic inclinometers:
None used during Ecosystem Monitoring survey.

Sub-Protocol 2c: Environmental sensor calibrations:
CTD temperature and pressure sensors are calibrated annually by the manufacturer and conductivity is calibrated before each survey against a known salinity sea water sample.

Protocol 3: Ship mounted sampling systems

None used during Ecosystem Monitoring survey.

Protocol 4: Survey operational procedures

The general description of the shipboard procedures as presented here is adapted from Jossi and Griswold (in review), which provides a more detailed description of NEFSC survey procedures.

Bongo Tow/CTD Profiler Operations:
The standard tow for all ecosystem monitoring surveys is the double oblique utilizing the 61cm Bongo net. The Bongo net samples both the ichthyoplankton and zooplankton community

simultaneously with one side of the bongo pair designated for ichthyoplankton sorting (6B3I) and one side for zooplankton sorting (6B3Z). The sampler describes an oblique path and samples during one descent and one ascent. The objective is to sample all depth strata equally yielding an unbiased sample that is representative of the entire water column over the northeast continental shelf and slope areas of highest priority for monitoring early life stages of fish, shellfish, and their zooplankton prey. In water depths less than 60 m, the winch payout and retrieval rates are reduced to extend sampling time to at least 5 min to ensure sampling an adequate volume of water for ichthyoplankton analyses. Multiple oblique ("yoyo") tows result in data that are not comparable to double oblique tows, and are therefore not considered standard tows.

Towing speed should be between 2.8 and 3.7 km/h (1.5 and 2.0 kt). Higher speeds introduce variables, particularly sample extrusion, which makes inclusion of the data with those from standard tows difficult. Lower speeds increase organism avoidance and are incompatible with vessel maneuverability.

Direction of tow is generally into the wind with a slightly angled rudder to keep the towing wire away from the ship however, it is the decision of the ship's officer on duty to determine towing direction based on current, water depth, other vessel traffic, fixed gear etc.

If a sample is lost, or the Bongo tow is non standard, the Chief Scientist/Watch Chief, or Ecosystem Monitoring Designee must make a decision regarding whether or not to do a re-tow. A non standard tow is one where all depths of the water column are not sampled uniformly, i.e., if the graphic display of CTD depth versus bottom shows a flat profile for more than 5% of the total time, or if the tow comes closer than 2 m from the bottom or exceeds 8 m from the bottom or there is indication of significant damage to or irregularity in function of the sampling gear such the sample is considered non representative of the water column. The decision of whether to re-tow is based on cruise priorities and time constraints.

Protocol 5: Net and frame construction

Gear Description:
The standard plankton sampling gear for all ecosystem monitoring surveys is the bongo net (Figure 1). The sampler consists of an aluminum frame with two cylinders each with a suspended flow meter in the opening. The towing wire passes between the cylinders, so that it is not in the sampling path. The attached nets are of a cylinder-cone configuration, 3.5 m long, with a 61 cm diameter mouth opening. The mesh aperture of the nets is 0.333 mm. The cod ends of the nets are folded over and tied with 68-cm long laces, using an easily untied bow knot.

A 45-kg (100-lb) dead weight (lead ball) provides a consistent depressing force for tow standardization. The lead ball is attached by an 80-cm (31.5-in) length of 0.95-cm (3/8-in) galvanized chain to the lower part of the Bongo yoke via a snap shackle (see Figure 1).

The condition of the nets is vital to the quantitative validity of the samples. Regular examination during sample wash-down must be made to ensure that the nets are free from any remains

(organisms, tar, etc.) from the previous tow and that no tears are present. Small holes up to _ inch may be plugged with silicone glue. Larger holes or tears should have a patch of Nitex net material sewn over them with nylon dental floss and then have silicone glue applied over the edges of the patch. If the damage appears too extensive or widespread, the net(s) should be removed from the frame and replaced with new or undamaged nets of the same mesh. Other than for small net tears and abrasions gear damage is dealt through redundancy. Backup bongo and CTD gear are taken on all surveys. In the interest of minimizing down-time while on station, a second completely rigged sampling array is kept ready, so that if there is any question of the primary Bongo array's integrity prior to deployment, the backup array may be deployed.

Bongo sample with CTD

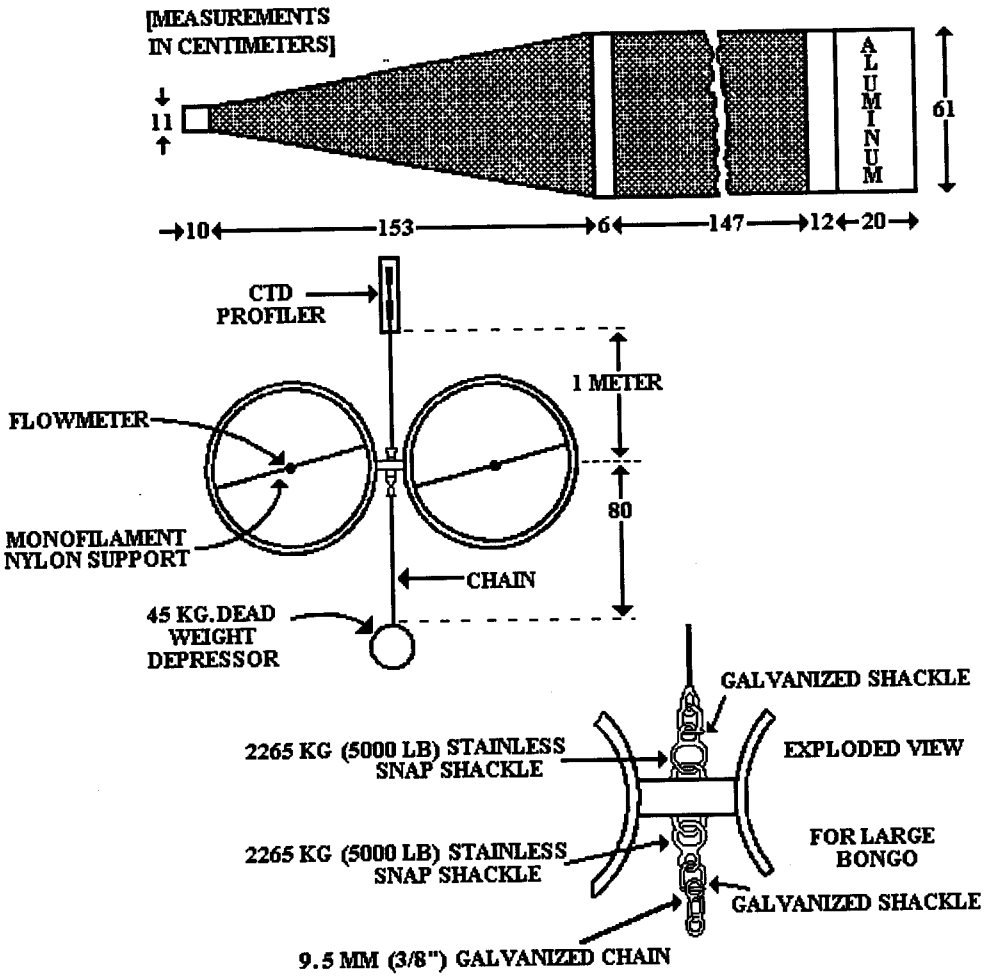

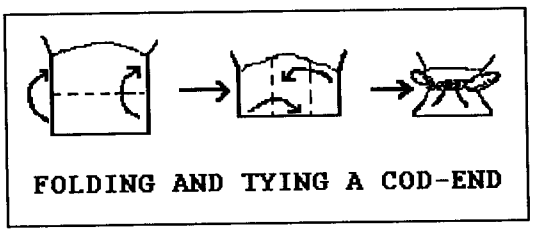

Appendix 4

December 24, 2003

Southeast Regional Standard Operating Procedures for: SEAMAP Surveys

Prepared by Personnel from NOAA Fisheries
Southeast Fisheries Science Center

Introduction

Ichthyoplankton samples have been collected during fishery-independent, resource surveys in the Gulf of Mexico (GOM) since 1982 under the Southeast Area Monitoring and Assessment Program (SEAMAP; Rester et al. 2000). Surveys are conducted by the National Marine Fisheries Service in cooperation with the states of Florida, Alabama, Mississippi, and Louisiana. The original plan for SEAMAP plankton surveys was to sample both the open (shelf edge to U.S. EEZ) and continental shelf (10 to 200 m) portions of the Gulf in their entirety at least once during each season. This ambitious goal has not been achieved because survey data relevant to fisheries-related issues must encompass the entire geographic extent of spawning which, for most species, includes either the entire open Gulf or continental shelf regions. Furthermore, once established, these surveys must be conducted on an annual basis in order to build a historical database from which population trends can be assessed. The current surveys do encompass the spawning seasons of many of the managed species in the Gulf. An annual SEAMAP survey index of larval king mackerel occurrence has been used as a tuning variable in VPA assessments since 1996. A similar index for red snapper is being developed using the SEAMAP survey time series.

SEAMAP ichthyoplankton data have been collected primarily during four survey periods: spring (April and May, 1982 to present), summer (June and July, 1982 to present), late summer/early fall (typically in September, 1986 to present) and fall (October and November, 1986 to present). The spring survey covers only open U.S. GOM waters, while the summer and fall surveys encompass only continental shelf waters from south Texas to Mobile Bay; and the late summer/early fall survey from south Texas to south Florida. There have been three, winter plankton surveys in open Gulf waters during the SEAMAP time series (in 1983, 1984 and 1996).

The sampling gear and methodology used during SEAMAP surveys (Rester et al. (2000) are similar to those recommended by Kramer et al. (1972), Smith and Richardson (1977) and Posgay and Marak (1980). A 61 cm bongo net fitted with 0.335 mm mesh netting is fished in an oblique tow path to a maximum depth of 200 m or to 2-5 m off the bottom at depths less than 200 m. A mechanical flowmeter is mounted off-center in the mouth of each bongo net to record the volume of water filtered. Volume filtered ranges from 22 to 555 m3 but is typically 30 to 40 m3 at the shallowest stations and 300 to 400 m3 at the deepest stations. A single or double 2x1 m pipe frame neuston net fitted with 0.950 mm mesh netting is towed at the surface with the frame half submerged for 10 minutes.

Most but not all SEAMAP stations are located at 30 mile or _ degree (~56 km) intervals in a fixed, systematic grid across the GOM, although, only every other N-S transect of stations is sampled during spring surveys. Occasionally during surveys, samples are taken at nonstandard locations or stations are moved to avoid navigational hazards. Samples are taken upon arrival on station regardless of time of day. At each station either a bongo and/or neuston tow are made, during the spring survey, bongo tows are made only at every other station.

Environmental data consistently gathered during SEAMAP surveys include: salinity, temperature and dissolved oxygen (see Rester et al. 2000 for complete description). Although, vertical

profiles of these parameters are taken, only the values at surface, mid and bottom depths (i.e., 200 m or less) have been data-based. Since ca. 1993 transmissivity and fluorescence have also been measured with addition of these sensors to the CTD.

Protocol 1: Determination of gear depth

Seamap surveys only use gear with telemetry

Protocol 2: Ichthyoplankton gear using telemetry

A Seabird SBE - 19 Seacat has been used since ca. 1996 during surveys to monitor depth fished in real time. The unit is mounted to the wire just above the bongo frame allowing real-time readout of depth during the tow. The distance from the SBE - 19 unit to the bottom of the bongo frame is measured by the FPC prior to the first station and this Depth Correction Factor (DCF) is applied to each tow's electronic reading to determine depth fished.

Sub-Protocol 2a: Pressure sensors
The SBE - 19 Seacat unit is returned to Seabird annually prior to each sampling season for calibration.

Sub-Protocol 2b: Flowmeter calibrations
General Oceanics mechanical flowmeters are used on SEFSC/SEAMAP surveys. These are returned to the manufacturer when damaged and/or after the field season for repair and maintenance. New flowmeters are used at the beginning of each survey and are replaced when they become damaged or malfunction during the survey. Flowmeters are checked visually before each station. Additionally, the performance of each flowmeter is monitored closely through a performance tracking form on which start and end flowmeter readings, total revolutions, tow depth and tow time are recorded for each station. Field personnel examine this listing for early signs of flowmeter malfunction.

Sub-Protocol 2c: Adjustment of electronic inclinometers
No electronic inclinometers used during Seamap surveys

Protocol 3: Ship mounted sampling systems

No ship mounted sampling systems used during Seamap surveys

Protocol 4: Survey operational procedures

a. Optimal wire angle

i. Bongo tow

The maximum depth for a standard bongo tow is 200 meters (m) or to within 2 m of bottom for shallower stations. This is achieved using a wire mounted SBE 19 SeaCat CTD with real-time depth readouts. The ship's speed is adjusted throughout the tow to preferably maintain a uniform optimal wire angle of 45%. At maximum depth, payout is stopped and retrieval immediately started. At this time, the time at max depth, wire angle, and winch wire out reading are recorded.

Calculated max depth = max wire out x cosine of wire angle is used in the case of loss of real-time data during a tow. If the angle exceeds 55%, falls to 35% OR if combined variation exceeds 15%, then this may result in the tow being repeated (the sample is saved until a better tow is completed).

ii. Neuston wire angle
Not applicable

b. Speed of tow

i. Bongo tow
Target tow speeds is 1.5 - 2.0 knots. The final tow speed is logged using a shipboard Scientific Computing System (SCS).

ii. Neuston tow
Target tow speed is 2 knots or the speed that maintains the net frame to be half submerged. The final tow speed is logged using a shipboard Scientific Computing System (SCS).

c. Duration or distance of tow

i. Bongo tow
Duration or distance of the bongo tow is dependant upon the payout and retrieval rate in conjunction with the target fishing depth. The below table is used as a guide for wire speed during a bongo tow. Target fishing depth is generally 1 to 2 m off the bottom or 200 m where station depth exceeds 200 m.

Target fishing DEPTH (m)	Total amount WIRE OUT (m)	PAYOUT RATE	RETRIEVAL RATE
0 - 19	< 27	10m/min	10m/min
20 - 69	28 - 97	15m/min	15m/min
70 - 100	> 99	20 - 30m/min	20m/min
101-200	> 143	50m/min	20m/min

ii. Neuston tow
The target neuston tows is 10 minutes in duration, however, the tow may be shortened to a minimum of 5 minutes if there are large concentrations of Sargassum, jellyfish or flotsam in the water.

d. Direction of tow
Tows are made in the direction of the next station unless weather and sea conditions at the station dictate otherwise.

e. Location of sampling sites
A fixed grid pattern of stations was established prior to 1982 when SEAMAP surveys first began in the Gulf of Mexico. Prior to each survey, station locations are provided to the ship's navigator to be loaded into the shipboard navigational system. Actual station position is allowed to vary by 5 miles from projected station location..

f. Criteria for determining the success of a tow and procedures to use if a tow is considered unsuccessful

Guidelines are given regarding repeating plankton tows in the field operations manual. In general, if one good bongo sample is collected, the tow need not be repeated. Only time, weather, or mechanical problems prevent the tow from being repeated when warranted.

For Bongo Tows:
If the wire angle exceeds 55%, falls to 35%, or if combined variation exceeds 15%, then the tow should be repeated. In addition, if mud or sand is present in both samples, the tow must be repeated (marginal samples are retained until completion of the second tow). If mud (no more than 2 tablespoons) is present in only one sample the tow need not be repeated. Both samples are saved and the presence of mud in the sample is recorded.

For Neuston Tows:
A tow is repeated if the codend is lost or if it over one-half of the net is filled with Sargassum, jellyfish or flotsam.

g. Vessel and winch operation during gear deployment and retrieval

See section c i above.

i. Ichthyoplankton gear construction plans, at-sea repair instructions and repair verification checklist

There is always at least one backup frame for both the bongo and neuston gear to replace lost or damaged equipment. Nets are checked for holes prior to each station and small holes are repaired. A net is replaced with a backup when the damage is too extensive to easily repair with epoxy.

j. Defining responsibility (i.e. survey scientists or vessel crew) for decisions regarding various aspects of the operations

Final decisions affecting data and sample collection is the responsibility of the FPC. The ship's command is responsible for vessel safety and operation.

Protocol 5: Net and frame construction

Sub-Protocol 5a: <u>Standard "MARMAP" Bongo array</u> used during SEAMAP/SEFSC

Frame: 60 cm Fiberglass pipes, painted, with a brass swivel.

Net: Nominal 60cm diameter, cylindrical section 1.5 m long, conical section 1.5 m long. Codend diameter 4.5".

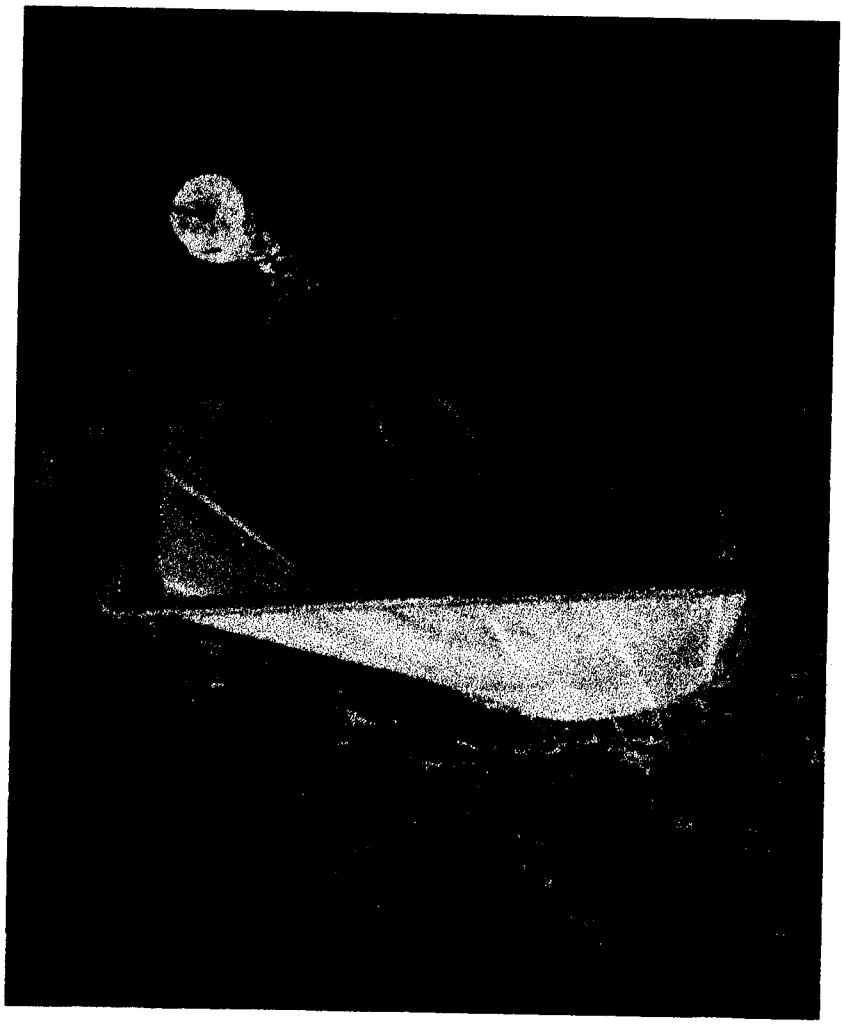

Sub-Protocol 5b: <u>Standard MARMAP Neuston array</u>

Frame: 1.0 x 2.0 m galvanized pipe frame.

Net: 1.0 x 2.0 m MARMAP neuston net, 16' long. Codend diameter 6.0".

Literature Cited

Kramer, D., M.J. Kalin, E.G. Stevens, J.R. Thrailkill, and J.R. Zweifel. 1972. Collecting and processing data on fish eggs and larvae in the California Current region. NOAA Technical Report. NMFS Circular 370. 38 p.

Posgay, J.A. and R.R. Marak. 1980. The MARMAP bongo zooplankton samplers. J. Northw. Atl. Fish. Sci. 1: 9-99.

Rester, J. K., N. Sanders, Jr., D.S. Hanisko, and B. Pellegrin. (editors) 2000. Seamap Environmental and Biological Atlas of the Gulf of Mexico, 1998. No. 75, 243pp. Gulf States Marine Fisheries Commission, Ocean Springs, MS.

Smith, P.E. and S. L. Richardson, eds. 1977. Standard techniques for pelagic fish egg and larva surveys. FAO Fisheries Technical Paper 175.

Appendix 5

January 2, 2004

Northwest Regional Standard Operating Protocols for: Ichthyoplankton Surveys

Prepared by Personnel from NOAA Fisheries
Northwest Fisheries Science Center

Introduction

The life history of most of the fish managed or studied by the Northwest Fisheries Science Center is such that surveys of fish eggs and larvae are not possible. For example, Pacific salmon spawn in freshwater, rockfish are ovoviviparous (that is, they give birth to live young which are essentially a juvenile fish at birth), and Pacific whiting and mackerels spawn in southern California thus are surveyed by the Southwest Center. Fish that do spawn pelagic eggs or have pelagic larvae in waters off Washington and Oregon include Dover sole, sablefish, sardines, anchovies, shelf groundfish (several species of sole), and the osmeriids. The species within this latter group will be the target of NWFSC egg and larval surveys.

Zooplankton has been sampled routinely off Washington and Oregon for the past 8 years and scientists at the NWFSC have begun to sort these samples for fish eggs and larvae of all species. The samples were not taken as part of a "ichthyoplankton survey" but have been taken in a standardized fashion, thus these time series may be useful as an "index" of interannual variations in stock size.

Ichthyoplankton was also sampled routinely off Oregon by Sally Richardson over a 7 year periods in the 1970s. We have all of her data sheets and data notebooks and are seeking funding to enter these data into a database. Thus we are in a position to be able to compare ichthyoplankton community structure during the 1970's to that observed from 1996 to present.

Protocol 1: Determination of gear depth.

We collect zooplankton with a 1/2 m diameter 200 um mesh net towed vertically from 100 m to the surface or from within 2 m of the bottom to the surface in shallower water at six stations along a cross-shelf transect off Newport. These tows are very similar to the CalVET or Pairovet tows made by the SWFSC. Gear depth is determined either by electronic meter block (that is calibrated annually by marine technicians employed by Oregon State University), or by marking the wire in 10 m intervals with white paint (as done by the AKFSC).

We also make double oblique tows with a 1-m diameter 333 um mesh net over the upper 20 m of the water column. The net has a 40 lb cannonball weight attached ~ 50 cm below the ring, is launched at a ship's speed of 2 kt, 60 m of wire is laid out, then retrieved. We also use a 50 cm diameter 200 um bongo net at night, towed in the same manner as the 1 m net. These tows are for the purpose of sampling adult euphausiids but may well prove useful for ichthyoplankton.

Protocol 2: Ichthyoplankton gear using telemetry.

We sampled zooplankton with a 1 m2, 333 um, MOCNESS system along five transects off Oregon and Northern California. Transects are off Newport (44° 40'N), Hecate Head (44°00'N), Coos Bay (43° 10'), Rogue River (42° 30') and Crescent City CA (41° 55'N). These transects were sampled in April, July and September for four years, 2000-2003, at 8-10 stations located at distances of one mile to 85 miles from shore. In addition, we sampled just the Newport Line, in February and November.

The MOCNESS system provides continuous read-out of temperature, salinity, water depth and wire angle to a PC in the lab thus ships speed can be modified to maintain a wire angle of 45%. These samples are being analyzed to determine the preferred depths of the dominant fish eggs and larvae so that when we begin our more routine ichthyoplankton surveys using Bongo nets, we will know the deepest depth that the Bongo nets should fish.

Protocol 3: Ship mounted sampling systems.

None available but we are considering the purchase of a CUFES system (see the SWFSC report) so as to sample sardine and anchovy eggs.

Protocol 4: Survey operational procedures

Discussions of the nature of ichthyoplankton surveys by NWFSC scientists are ongoing, therefore operational procedures cannot be given at this time. We will almost certainly NOT launch an extensive survey such as done by CalCOFI rather we fill focus on sampling frequently along several transect lines so as to produce an "index" that captures inter-annual variations in fish abundance. In addition, we will participate in a coast-wide sardine survey with the Southwest Center and survey the waters off Oregon and Washington. Scientists at the NWFSC are also planning to initiate surveys of juvenile rockfish and juvenile sablefish.

Protocol 5: Net and frame construction.

We will continue to use the 1/2 m diameter 200 um mesh vertical tow net for zooplankton studies and from these samples will sort the fish eggs and larvae in the same manner as with the Pairovet sampling done at SWFSC. We will continue to use the 1 m^2 MOCNESS for zooplankton, fish eggs and fish larvae when we have available a UNOLS or NOAA research vessel. However, we know that we will often be restricted to use of chartered commercial fishing vessels, and know that we cannot use a MOCNESS from such ships. Therefore, in such cases, we will sample the ichthyoplankton with the vertical tow net described above and with our 61 cm Bongo net fitted with 333 um mesh nets. The depth to which the Bongo will be towed will be determined after we have analyzed a subset of the existing MOCNESS tows.